Version:
December 1, 2022

(TPSPA) SMD High Saturation Power Inductor

Web: www.token.com.tw

Email: rfq@token.com.tw

Token Electronics Industry Co., Ltd.

Taiwan: No.137, Sec. 1, Zhongxing Rd., Wugu District,
New Taipei City, Taiwan. 248012
Tel: +886 2981 0109 Fax: +886 2988 7487

China: 17P, Nanyuan Maple Leaf Bldg., Nanshan Ave.,
Nanshan Dist., Shenzhen, Guangdong, China. 518054
Tel: +86 755 26055363

Product Introduction

Token Power Inductor Enhances Low DCR High Saturation Current With Up To 1MHz High Frequency.

Features :

- Low Profile: 3.0mm ~ 6.5mm.
- Low DCR, SMT Power Inductor.
- For Large Current Use: 10 amp ~ 60 amp.
- High Frequency (up to 1MHz).

Applications :

- DC-DC converter or VRM applications.
- Notebook, Laptop Computer, Graphic Card, VGA Module.
- Thin type on-board power supply module for exchanger.
- Inductor for general purpose use.

Token's (TPSPA) inductor features high saturation current and low direct current resistance (DCR) in a rugged surface-mount package. Available in three industry-standard footprint (6.8 mm × 7.1 mm), (10.5 mm × 11.5 mm), and (12.8 mm × 13.2 mm) with a profile from 3.0 mm to 6.5 mm maximum, the TPSPA series inductors use an advanced core material that operating temperature range from -25℃ to +125℃, and are said to provide the lowest DCR of any inductor in this size and profile.

These high saturation current inductors are suitable for use in voltage regulator module applications in desktop computers, notebook computers, point-of-load converters, workstations and servers as well as DC-DC applications, and other high-power, high-density, high-ambient temperature applications.

Token (TPSPA) series provides high peak saturation current and a maximum operating current rating that enables the inductors to handle the high current requirements of microprocessors with significant saturation margin. The series also offers a saturation current range from 2.25 A up to 120 A, heat rating current from 2.9 A to 60 A, typical DCR from 0.47 mΩ to 249.0 mΩ, and maximum DCR from 0.50 mΩ to 270 mΩ, which results in lower copper losses and maximizes the current rating for higher component performance and system efficiency. The inductance values range from 0.1μH to 100μH.

The (TPSPA) inductors are RoHS compliant and meet standard EIA481 requirements. Custom parts are available on request. Token will also produce devices outside these specifications to meet specific customer requirements, please contact our sales for more information.

Contact us with your specific needs. For more information, please link to Token official website "SMD Power Inductors".

Dimensions & Configurations

Dimensions & Configurations (TPSPA)

Type	A	B	C	D	E
TPSPA0603	6.8max	7.1 ± 0.3	3.0 max.	3.0 ± 0.3	1.6 ± 0.3
TPSPA0603A	6.8max	7.1 ± 0.3	3.0 max.	3.0 ± 0.3	1.6 ± 0.3
TPSPA1040	10.5 ± 0.5	11.5 ± 1.0	4.0 max.	3.0 ref.	2.3 ref.
TPSPA1040A	10.5 ± 0.5	11.5 ± 1.0	4.0 max.	2.5 ref.	2.3 ref.
TPSPA1040B	10.5 ± 0.5	11.5 ± 1.0	4.0 max.	3.0 ref.	2.3 ref.
TPSPA1040C	10.5 ± 0.5	11.5 ± 1.0	4.0 max.	3.0 ref.	2.3 ref.
TPSPA1235	12.8 ± 0.5	13.2 ± 1.0	3.5 max.	3.8 ref.	2.5 ref.
TPSPA1240	12.8 ± 0.5	13.2 ± 1.0	4.0 max.	3.8 ref.	2.5 ref.
TPSPA1250	12.8 ± 0.5	13.2 ± 1.0	5.0 max.	3.8 ref.	2.5 ref.
TPSPA1265	12.8 ± 0.5	13.2 ± 1.0	6.5 max.	3.8 ref.	2.5 ref.

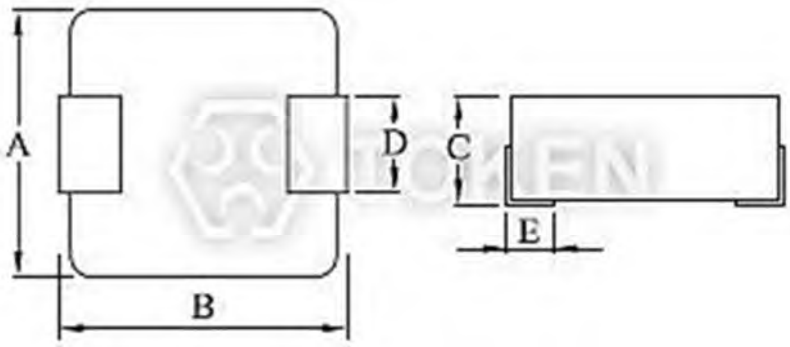

(TPSPA) Dimensions

TPSPA0603

Electrical Characteristics (TPSPA0603)

Part Number	L0 Inductance (μH) ±20% @0A	DCR (mΩ)		Heat Rating Current Idc (A) Typical	Saturation Current Isat (A) Typical
		(Typical)	(Max)		
TPSPA-0603-R10M	0.10	1.5	1.7	32.5	60
TPSPA-0603-R15M	0.15	1.9	2.5	26	52
TPSPA-0603-R20M	0.20	2.4	3.0	24	41
TPSPA-0603-R22M	0.22	2.5	2.8	23	40
TPSPA-0603-R33M	0.33	3.5	3.9	20	30
TPSPA-0603-R47M	0.47	4.0	4.2	17.5	26
TPSPA-0603-R68M	0.68	5.0	5.5	15.5	25
TPSPA-0603-R82M	0.82	6.7	8.0	13	24
TPSPA-0603-1R0M	1.0	9	10.0	11	22
TPSPA-0603-1R5M	1.5	14	15.0	9	18
TPSPA-0603-2R2M	2.2	18	20.0	8	14
TPSPA-0603-3R3M	3.3	28	30.0	6	13.5
TPSPA-0603-4R7M	4.7	37	40.0	5.5	10
TPSPA-0603-6R8M	6.8	54	60.0	4.5	8
TPSPA-0603-8R2M	8.2	64	68.0	4	7.5
TPSPA-0603-100M	10.0	102	105.0	3	7

- Note: All test Data is referenced to 25℃ ambient.
  Typical Heat Rating DC Current would cause an approximately ΔT of 40℃.
  Typical Saturation DC Current would cause Lo to drop approximately 20%.
  Operating Temperature Range: -25℃ to +125℃.

TPSPA0603A

Electrical Characteristics (TPSPA0603A)

Part Number	L0 Inductance (μH) ±20% @0A	DCR (mΩ)		Heat Rating Current Idc (A) Typical	Saturation Current Isat (A) Typical
		(Typical)	(Max)		
TPSPA-0603A-1R0M	1.0	7.6	8.0	12.5	9.5
TPSPA-0603A-1R5M	1.5	11.7	12.5	10.5	8.0
TPSPA-0603A-2R2M	2.2	15.7	16.5	9.0	7.0
TPSPA-0603A-3R3M	3.3	24.8	26.0	7.0	6.5
TPSPA-0603A-4R7M	4.7	31.8	33.4	6.0	4.0
TPSPA-0603A-6R8M	6.8	44.6	46.8	5.5	4.0
TPSPA-0603A-8R2M	8.2	52.3	54.9	5.0	4.0
TPSPA-0603A-100M	10.0	67.8	71.2	4.0	3.5
TPSPA-0603A-220M	22.0	128.9	135.0	2.9	2.5

- Note: All test Data is referenced to 25℃ ambient.
  Typical Heat Rating DC Current would cause an approximately ΔT of 40℃.
  Typical Saturation DC Current would cause Lo to drop approximately 20%.
  Operating Temperature Range: -25℃ to +125℃.

TPSPA1040

Electrical Characteristics (TPSPA1040)

Part Number	L0 Inductance (μH) ±20% @0A	DCR (mΩ)		Heat Rating Current Idc (A) Typical	Saturation Current Isat (A) Typical
		(Typical)	(Max)		
TPSPA-1040-R19M	0.19	0.50	0.60	44	44
TPSPA-1040-R24M	0.24	0.70	0.80	38	38
TPSPA-1040-R36M	0.36	0.85	0.95	35	35
TPSPA-1040-R47M	0.47	1.20	1.40	32	32
TPSPA-1040-R56M	0.56	1.25	1.35	30	30
TPSPA-1040-R68M	0.68	1.60	1.80	25	30
TPSPA-1040-R78M	0.78	1.60	1.70	25	25
TPSPA-1040-1R0M	1.00	2.20	2.50	20	20
TPSPA-1040-1R8M	1.80	4.50	5.00	15	15
TPSPA-1040-2R0M	2.00	5.20	5.80	14	14

- Note: All test Data is referenced to 25℃ ambient.
  Typical Heat Rating DC Current would cause an approximately ΔT of 40℃.
  Typical Saturation DC Current would cause Lo to drop approximately 20%.
  Operating Temperature Range: -25℃ to +125℃.

TPSPA1040A

Electrical Characteristics (TPSPA1040A)

Part Number	L0 Inductance (μH) ±20% @0A	DCR (mΩ)		Heat Rating Current Idc (A) Typical	Saturation Current Isat (A) Typical
		(Typical)	(Max)		
TPSPA-1040A-R19M	0.19	0.70	0.80	38	60
TPSPA-1040A-R22M	0.22	0.60	0.80	38	50
TPSPA-1040A-R36M	0.36	1.10	1.20	30	50
TPSPA-1040A-R47M	0.47	1.50	1.70	28	45
TPSPA-1040A-R56M	0.56	1.60	1.70	25	40
TPSPA-1040A-R68M	0.68	1.60	1.80	25	30
TPSPA-1040A-1R0M	1.0	2.80	3.20	21	30
TPSPA-1040A-1R5M	1.5	4.50	5.00	15	20
TPSPA-1040A-2R5M	2.5	8.50	9.50	13	18

- **Note: All test Data is referenced to 25℃ ambient.**
  Typical Heat Rating DC Current would cause an approximately ΔT of 40℃.
  Typical Saturation DC Current would cause Lo to drop approximately 20%.
  Operating Temperature Range: -25℃ to +125℃.

TPSPA1040B

Electrical Characteristics (TPSPA1040B)

Part Number	L0 Inductance (μH) ±20% @0A	DCR (mΩ)		Heat Rating Current Idc (A) Typical	Saturation Current Isat (A) Typical
		(Typical)	(Max)		
TPSPA-1040B-R19M	0.19	0.875	0.95	40	90
TPSPA-1040B-R36M	0.36	1.30	1.40	31.5	60
TPSPA-1040B-R56M	0.56	1.70	1.80	27.5	49
TPSPA-1040B-1R0M	1.0	3.70	4.10	17.5	36
TPSPA-1040B-1R5M	1.5	5.30	5.80	15	27.5
TPSPA-1040B-2R2M	2.2	8.20	9.00	12	25.5
TPSPA-1040B-3R3M	3.3	10.80	11.80	10	18.6
TPSPA-1040B-4R7M	4.7	15.00	16.50	9.5	17
TPSPA-1040B-5R6M	5.6	17.60	19.30	8.5	16
TPSPA-1040B-6R8M	6.8	21.20	23.30	8.0	13.5
TPSPA-1040B-8R2M	8.2	31.00	34.00	7.0	12.5
TPSPA-1040B-100M	10	33.20	36.50	6.8	12

- Note: All test Data is referenced to 25℃ ambient.
  Typical Heat Rating DC Current would cause an approximately ΔT of 40℃.
  Typical Saturation DC Current would cause Lo to drop approximately 20%.
  Operating Temperature Range: -25℃ to +125℃.

TPSPA1040C

Electrical Characteristics (TPSPA1040C)

Part Number	L0 Inductance (μH) ±20% @0A	DCR (mΩ)		Heat Rating Current Idc (A) Typical	Saturation Current Isat (A) Typical
		(Typical)	(Max)		
TPSPA-1040C-R19M	0.19	0.70	0.80	40.0	46
TPSPA-1040C-R24M	0.24	0.85	0.95	33	44
TPSPA-1040C-R36M	0.36	1.05	1.15	32	30
TPSPA-1040C-R47M	0.47	1.53	1.68	30	30
TPSPA-1040C-R56M	0.56	1.60	1.80	32	22
TPSPA-1040C-R78M	0.78	1.80	1.90	27	22
TPSPA-1040C-1R0M	1.0	2.30	2.50	25	20
TPSPA-1040C-1R8M	1.8	4.50	5.00	17	16
TPSPA-1040C-2R0M	2.0	5.20	5.80	16	14
TPSPA-1040C-4R7M	4.7	12.90	14.20	9.5	7.6
TPSPA-1040C-6R8M	6.8	17.50	19.30	9.0	7.5
TPSPA-1040C-100M	10	27.80	30.50	7.5	7.1
TPSPA-1040C-150M	15	40.90	45.00	6.25	6.0
TPSPA-1040C-220M	22	60.40	66.00	5.0	4.5
TPSPA-1040C-330M	33	87.50	94.50	4.4	4.0
TPSPA-1040C-470M	47	132.0	145.0	4.0	3.0
TPSPA-1040C-101M	100	249.0	270.0	3.00	2.25

- Note: All test Data is referenced to 25℃ ambient.
  Typical Heat Rating DC Current would cause an approximately ΔT of 40℃.
  Typical Saturation DC Current would cause Lo to drop approximately 20%.
  Operating Temperature Range: -25℃ to +125℃.

TPSPA1235

Electrical Characteristics (TPSPA1235)

Part Number	L0 Inductance (μH) ±20% @0A	DCR (mΩ)		Heat Rating Current Idc (A) Typical	Saturation Current Isat (A) Typical
		(Typical)	(Max)		
TPSPA-1235-R10M	0.10	0.8	0.96	43	84
TPSPA-1235-R15M	0.15	1.0	1.2	41	75
TPSPA-1235-R22M	0.22	1.1	1.3	38.5	65
TPSPA-1235-R33M	0.33	1.3	1.5	36.5	62
TPSPA-1235-R47M	0.47	1.6	2.0	32	55
TPSPA-1235-R60M	0.60	1.8	2.2	29	51
TPSPA-1235-R68M	0.68	2.3	2.5	28	49
TPSPA-1235-R82M	0.82	2.6	3.0	25	44
TPSPA-1235-1R0M	1.0	3.3	3.5	24	40
TPSPA-1235-1R5M	1.5	5.1	5.5	19	35
TPSPA-1235-1R8M	1.8	6.5	7.0	16.5	30
TPSPA-1235-2R2M	2.2	7.2	8.0	16	29
TPSPA-1235-3R3M	3.3	11.0	12.0	12	27
TPSPA-1235-4R7M	4.7	14.3	15.0	10	24
TPSPA-1235-5R6M	5.6	17.1	18.0	9.5	19
TPSPA-1235-6R8M	6.8	19.8	22.0	9	18
TPSPA-1235-8R2M	8.2	24.8	28.0	8.5	16
TPSPA-1235-100M	10	30.4	34.0	7	14

- Note: All test Data is referenced to 25℃ ambient.
  Typical Heat Rating DC Current would cause an approximately ΔT of 40℃.
  Typical Saturation DC Current would cause Lo to drop approximately 20%.
  Operating Temperature Range: -25℃ to +125℃.

TPSPA1240

Electrical Characteristics (TPSPA1240)

Part Number	L0 Inductance (μH) ±20% @0A	DCR (mΩ)		Heat Rating Current Idc (A) Typical	Saturation Current Isat (A) Typical
		(Typical)	(Max)		
TPSPA-1240-R10M	0.10	0.90	1.10	43	75
TPSPA-1240-R22M	0.22	1.20	1.40	41	70
TPSPA-1240-R33M	0.33	1.30	1.50	38	60
TPSPA-1240-R47M	0.47	1.40	1.90	32	55
TPSPA-1240-R60M	0.60	2.00	2.30	30	50
TPSPA-1240-R68M	0.68	2.10	2.50	28	46
TPSPA-1240-R82M	0.82	2.70	3.10	25	44
TPSPA-1240-0R9M	0.90	3.00	3.50	24	40
TPSPA-1240-1R0M	1.00	3.00	3.70	24	38
TPSPA-1240-1R2M	1.20	3.00	3.70	20	25
TPSPA-1240-1R5M	1.50	5.50	6.00	19	30
TPSPA-1240-1R8M	1.80	6.40	7.60	16	26
TPSPA-1240-2R2M	2.20	6.40	7.60	16	22
TPSPA-1240-3R3M	3.30	7.50	8.40	14	20
TPSPA-1240-4R7M	4.70	10.5	12.0	11	15

- **Note: All test Data is referenced to 25℃ ambient.**
  Typical Heat Rating DC Current would cause an approximately ΔT of 40℃.
  Typical Saturation DC Current would cause Lo to drop approximately 20%.
  Operating Temperature Range: -25℃ to +125℃.

TPSPA1250

Electrical Characteristics (TPSPA1250)

Part Number	L0 Inductance (μH) ±20% @0A	DCR (mΩ)		Heat Rating Current Idc (A) Typical	Saturation Current Isat (A) Typical
		(Typical)	(Max)		
TPSPA-1250-R10M	0.10	0.53	0.60	55	118
TPSPA-1250-R22M	0.22	0.64	0.80	51	110
TPSPA-1250-R33M	0.33	0.85	1.10	42	80
TPSPA-1250-R47M	0.47	1.10	1.30	38	65
TPSPA-1250-R56M	0.56	1.30	1.50	36	55
TPSPA-1250-R68M	0.68	1.50	1.70	34	54
TPSPA-1250-R82M	0.82	2.00	2.30	31	53
TPSPA-1250-1R0M	1.00	2.10	2.50	29	50
TPSPA-1250-1R2M	1.20	2.80	3.50	25	49
TPSPA-1250-1R5M	1.50	3.40	4.10	23	48
TPSPA-1250-1R8M	1.80	4.20	4.90	19	40
TPSPA-1250-2R2M	2.20	4.60	5.50	20	32
TPSPA-1250-3R3M	3.30	7.70	9.20	15	32
TPSPA-1250-4R7M	4.70	12.8	15.0	12	27
TPSPA-1250-5R6M	5.60	14.0	16.5	11.5	22
TPSPA-1250-6R8M	6.80	15.4	18.5	11	21
TPSPA-1250-7R8M	7.80	17.2	20.5	10	18
TPSPA-1250-8R2M	8.20	18.9	22.5	9.5	18
TPSPA-1250-100M	10.0	21.4	25.5	9	16

- Note: All test Data is referenced to 25℃ ambient.
  Typical Heat Rating DC Current would cause an approximately ΔT of 40℃.
  Typical Saturation DC Current would cause Lo to drop approximately 20%.
  Operating Temperature Range: -25℃ to +125℃.

TPSPA1265

Electrical Characteristics (TPSPA1265)

Part Number	L0 Inductance (μH) ±20% @0A	DCR (mΩ)		Heat Rating Current Idc (A) Typical	Saturation Current Isat (A) Typical
		(Typical)	(Max)		
TPSPA-1265-R10M	0.10	0.47	0.50	60	120
TPSPA-1265-R15M	0.15	0.53	0.60	55	118
TPSPA-1265-R22M	0.22	0.63	0.70	53	112
TPSPA-1265-R30M	0.30	0.70	0.80	48	72
TPSPA-1265-R33M	0.33	0.83	0.90	46	65
TPSPA-1265-R40M	0.40	0.90	1.00	44	64
TPSPA-1265-R47M	0.47	1.00	1.20	41	63
TPSPA-1265-R56M	0.56	1.20	1.40	37	62
TPSPA-1265-R68M	0.68	1.40	1.60	35	60
TPSPA-1265-R82M	0.82	1.60	1.90	33	50
TPSPA-1265-1R0M	1.00	1.70	2.00	32	49
TPSPA-1265-1R2M	1.20	2.10	2.50	30	48
TPSPA-1265-1R5M	1.50	2.50	3.00	27	45
TPSPA-1265-1R8M	1.80	2.80	3.20	24	41
TPSPA-1265-2R2M	2.20	3.50	4.20	22	40
TPSPA-1265-3R3M	3.30	5.70	6.80	18	35
TPSPA-1265-4R7M	4.70	9.30	11.2	13.5	30
TPSPA-1265-5R6M	5.60	9.30	10.0	13.5	26.5
TPSPA-1265-6R8M	6.80	13.1	14.0	11.5	16.5
TPSPA-1265-8R2M	8.20	14.5	15.5	10.5	16.0
TPSPA-1265-100M	10.0	15.8	16.8	10	15.5

- Note: All test Data is referenced to 25℃ ambient.
  Typical Heat Rating DC Current would cause an approximately ΔT of 40℃.
  Typical Saturation DC Current would cause Lo to drop approximately 20%.
  Operating Temperature Range: -25℃ to +125℃.

Order Codes

Order Codes (TPSPA)

TPSPA	1265	-	R10	M
Part Number	Size (L×M)(mm)		Inductance	Tolerance
TPSPA	0603 6.8×7.1		R10 0.10μH	M 20%
	0603A 6.8×7.1		1R0 1.00μH	
	1040 10.5×11.5			
	1040A 10.5×11.5			
	1040B 10.5×11.5			
	1040C 10.5×11.5			
	1235 12.8×13.2			
	1240 12.8×13.2			
	1250 12.8×13.2			
	1265 12.8×13.2			

General Information

How to Quickly Search Inductor for all of the Characteristics?

Quickly Search Inductor Finder

Searching and comparing data sheets of inductor manufacturers can be time consuming. Token's Parameter Sorting Search Mode allows selection of inductors based on different parameters.
By entering just the inductance value,
By sorting parameter to narrow down searching range,
Or by enter keyword / part number / size dimensions L*W*H to partial or exact searching.

Leading-Edge Technology

Token Electronics brand passive component specializes in standard and custom solutions offering the latest in state-of-the-art low profile high power density inductor components. Token provides cost-effective, comprehensive solutions that meet the evolving needs of technology-driven markets. In working closely with the industry leaders in chipset and core development, we remain at the forefront of innovation and new technology to deliver the optimal mix of packaging, high efficiency and unbeatable reliability. Our designs utilize high frequency, low core loss materials, new and custom core shapes in combination with innovative construction and packaging to provide designers with the highest performance parts available on the market.

Find Inductor Solutions Faster

Find Your Inductor - rfq@token.com.tw

Only timely and accurate information can help manage the changing needs of your customers. The Token Inductor Finder puts you only a click away from all of the inductor information you need.

Find Your Solution - rfq@token.com.tw

Selecting the correct inductor solution will not only save you time, but it will give you a competitive edge. At Token, we are committed to helping you find the most efficient alternative for your power design. Our inductor and power supply design experts can help you make that selection.

Please forward us:

- A brief description of your particular application's requirements.
- Details of an existing solution that you'd like to replace, enhance or find an alternative.
- Inquiries for feasibility to tailor a power transformer or inductor to your specific application.

We can also help you with any additional technical information you might need relating to any of our products.

Ask Us Today