Version:
December 1, 2022

Through Hole Inductor Series

Web: www.token.com.tw

Email: rfq@token.com.tw

Token Electronics Industry Co., Ltd.

Taiwan: No.137, Sec. 1, Zhongxing Rd., Wugu District,
New Taipei City, Taiwan. 248012
Tel: +886 2981 0109 Fax: +886 2988 7487

China: 17P, Nanyuan Maple Leaf Bldg., Nanshan Ave.,
Nanshan Dist., Shenzhen, Guangdong, China. 518054
Tel: +86 755 26055363

Production Index

Through Hole Inductor Series

Measurements of Fixed Inductors

Measurements of Fixed Inductors

Measurements of Fixed Inductors

Inductance

The inductance is measured with a Q-meter, LCR meter or an impedance analyzer.

- Fixed inductors for signals: Use of a Q-meter in which the frequency is for direct readout of the inductance or at the specified frequency.
- Inductors for high current power line circuits: 1kHz or 100kHz.

Q Factor

The unloaded Q is measured with a Q-meter, LCR meter or impedance analyzer. The frequency of measurement is that at which the inductance has been measured or at a different frequency as specified. However, for high current power line inductors, the resistance is measured and the Q may be neglected.

DCR (DC Resistance), SRF (Self-Resonant Frequency)

DCR: A digital multimeter is used for measurement;
SRF: Measured with a Q-meter, impedance analyzer or network analyzer.

Dielectric Strength

For specimen coil, apply 100V DC for 5 seconds between the shielding case and terKHzals. There should be no damage or abnormalities in the inductor.

Maximum Allowable Current

The maximum allowable current is a DC Current which causes initial inductance to decrease by 10% or 30%. Or coil temperature to rise by 20℃ or 40℃, whichever is smaller. (Reference ambient temperature: 20℃)

Solderability

After immersion of terKHzals in flux for 5 to 10 seconds, dip the terKHzals in the solder bath at 245±5℃ for 2±0.5 seconds. Make certain that more than 3/4 of the surface of the terKHzals is coated with new solder.

Dry Heat Test

The change in inductance, if any, is measured after exposure to 85±2℃ in a test chamber for 500±12 hours and for 1 to 2 hours at room temperature.

Shock Tests

The change in inductance, if any, is measured after the following tests.

- Free Fall Drop Test: A specimen coil is mounted on a test board and dropped freely 3 times from a height of 1 meter.
- Impact Tester: A specimen inductor is mounted on a test board and dropped 3 times in three directions with shock applied for 0.01 seconds at 981 m/s^2. The change in inductance, if any, is measured after the tests.

Vibration Test

The change in inductance, if any, is measured after the following condition:

- A specimen coil/inductor is mounted on a test board of vibration instrument.
- Overall amplitude: 1.5mm, frequency range: 10~55Hz, and swept in the (10~55~10)Hz order per KHzute for 2 hrs in each of the 3 directions for total of 6 hrs.

Humidity Test

The change in inductance, if any, is measured after exposure in a test chamber to humidity of 90% to 95% R.H. at 60±2℃ for 500±12 hours and 1 hour exposure at room temperature.

TerKHzology & Glossary

TerKHzology & Glossary

Magnetic Product TerKHzology & Glossary

Air Core Inductor (Ceramic Core Inductor)

Air core inductors are often referred to as "Ceramic Core" inductors. Air core inductor is most often used in high frequency applications where low inductance values, very low core losses and high Q values are required.

Ceramic has no magnetic properties. Thus, there is no increase in permeability due to the core material. Its main purpose is to provide a form for the coil. In some designs it also provides the structure to hold the terKHzals in place. Ceramic has a very low thermal coefficient of expansion. This allows for relatively high inductance stability over the operating temperature ranges.

Axial Inductor

An inductor constructed on a core with concentric leads on opposite ends of the core. Axial inductors are available for both power applications and RF applications, and are available in many core materials including the basic phenolic, ferrite and powdered iron types. Both rod and bobbin shapes are utilized. Axial inductors are very suitable for tape and reel packaging for auto placement.

RF Choke

Another name for a radio frequency inductor which is intended to filter or choke out signals.

What is Inductor?

A passive component designed to resist changes in current. Inductors are often referred to as "AC Resistors". The ability to resist changes in current and the ability to store energy in its magnetic field, account for the bulk of the useful properties of inductors. Current passing through an inductor will produce a magnetic field. A changing magnetic field induces a voltage which opposes the field-producing current. This property of impeding changes of current is known as inductance. The voltage induced across an inductor by a change of current is defined as:

Equation V = L di/dt where V (Induced Voltage); L (Inductance Value).
Thus, the induced voltage is proportional to the inductance value and the rate of current change.

DCR (DC Resistance)

The resistance of the inductor winding measured with no alternating current. The DCR is most often KHzimized in the design of an inductor. The unit of measure is ohms, and it is usually specified as a maximum rating.

EMI

EMI is an acronym for Electromagnetic Interference. It is unwanted electrical energy in any form. EMI is often used interchangeably with "Noise".

Ferrite Core

Ferrite is a magnetic material which consists of a mixed oxide of iron and other elements that are made to have a crystalline molecular structure. The general composition of ferrites is $xxFe_2O_4$ where xx represents one or several metals. The most popular metal combinations are manganese and zinc (MnZn) and nickel and zinc (NiZn). These metals can be easily magnetized.

Impedance

The impedance of an inductor is the total resistance to the flow of current, including the AC and DC component. The DC component of the impedance is simply the DC resistance of the winding. The AC component of the impedance includes the inductor reactance. The following formula calculates the inductive reactance of an ideal inductor (i.e., one with no losses) to a sinusoidal AC signal.

Equation $Z = XL = 2\pi fL$.

This equation indicates that higher impedance levels are achieved by higher inductance values or at higher frequencies.

Inductance & Tolerance

The property of a circuit element which tends to oppose any change in the current flowing through it. The inductance for a given inductor is influenced by the core material, core shape and size, the turns count and the shape of the coil. Inductors most often have their inductances expressed in microhenries (μH).

Tolerance Letter of Inductance Table		
Letter	**Tolerance**	**Inductance**
F	± 1 %	1 henry (H) = 10^6 μH
G	± 2 %	
H	± 3 %	1 millihenry (mH) = 10^3 μH
J	± 5 %	
K	± 10 %	1 microhenry (μH) = 1 μH
L	± 15 %	1 nanohenry (nH) = 10^{-3} μH
M	± 20 %	

Matched Impedance

The condition that exists when two coupled circuits are adjusted so that the output impedance of one circuit equals the input impedance of the other circuit connected to the first. There is a KHzimum power loss between two circuits when their connecting impedances are equal.

Multilayer Inductor

An inductor constructed by layering the coil between layers of core material. The coil typically consists of a bare metal material (no insulation). This technology is sometimes referred to as "non-wire wound". The inductance value can be made larger by adding additional layers for a given spiral pattern.

Quality Factor Q

The Q value of an inductor is a measure of the relative losses in an inductor. The Q is also known as the "quality factor" and is technically defined as the ratio of inductive reactance to effective resistance and is represented by: **Equation $Q = X_L / R_e = 2\pi fL / R_e$**

Since X_L and R_e are functions of frequency, the test frequency must be given when specifying Q. X_L typically increases with frequency at a faster rate than R_e at lower frequencies, and vice versa at higher frequencies. This results in a bell shaped curve for Q vs. frequency. R_e is mainly comprised of the DC resistance of the wire, the core losses and skin effect of the wire. Based on the above formula, it can be shown that the Q is zero at the self-resonant frequency since the inductance is zero at this point.

Rated Current

The level of continuous DC current that can be passed through the inductor. This DC current level is based on a maximum temperature rise of the inductor at the maximum rated ambient temperature. The rated current is related to the inductor's ability to KHzimize the power losses in the winding by having a low DC resistance. It is also related to the inductor's ability to dissipate this power lost in the windings. Thus, the rated current can be increased by reducing the DC resistance or increasing the inductor size. For low frequency current waveforms, the RMS current can be substituted for the DC rated current. The rated current is not related to the magnetic properties of the inductor.

Saturation Current

The DC bias current flowing through the inductor which causes the inductance to drop by a specified amount from the initial zero DC bias inductance value. Common specified inductance drop percentages include 10 % and 20 %. It is useful to use the 10 % inductance drop value for ferrite cores and 20 % for powdered iron cores in energy storage applications.

The cause of the inductance to drop due to the DC bias current is related to the magnetic properties of the core. The core, and some of the space around the core, can only store a given amount of magnetic flux density. Beyond the maximum flux density point, the permeability of the core is reduced. Thus, the inductance is caused to drop. Core saturation does not apply to “air-core” inductors.

Self-Resonant Frequency (SRF)

The frequency at which the inductors distributed capacitance resonates with the inductance. It is at this frequency that the inductance is equal to the capacitance and they cancel each other. The inductor will act purely resistive with high impedance at the SRF point.

The distributed capacitance is caused by the turns of wire layered on top of each other and around the core. This capacitance is in parallel to the inductance. At frequencies above the SRF, the capacitive reactance of the parallel combination will become the doKHzant component.

Also, the Q of the inductor is equal to zero at the SRF point since the inductive reactance is zero. The SRF is specified in MHz and is listed as a KHzimum value on product data sheets.

Shielded Inductor

An inductor designed for its core to contain a majority of its magnetic field. Some inductor designs are self-shielding. Examples of these are magnetic core shapes which include toroid, pot cores and E-cores. Magnetic core shapes such as slug cores and bobbins require the application of a magnetic sleeve or similar method to yield a shielded inductor.

It should be noted that magnetic shielding is a matter of degree. A certain percentage of the magnetic field will escape the core material. This is even applicable for toroidal cores as lower core permeability will have higher fringing fields than will high permeability toroidal cores.

Toroidal Inductor

An inductor constructed by placing a winding(s) on a core that has a donut shaped surface. Toroidal cores are available in many magnetic core materials within the four basic types: Ferrite, Powdered Iron, Alloy and High Flux, and Tape Wound. Characteristics of toroidal inductors include: self-shielding (closed magnetic path), efficient energy transfer, high coupling between windings, and early saturation.

(TCAC)
Air Coils Inductors, Spring Coils

Product Introduction

Token will do any custom coil windings of Air Coils (Spring Coils) for you.

Features :
- High Q values
- High frequency

Applications :
- Set up box, CATV & Electronic Products.

Token manufactures all types of air coil inductors. Air Core Coils' another name is Spring Coils. Token's Air Core Coil (TCAC) Series has advantages of free from iron losses, non-linearity, single layer coils structure, low self-capacitance, and self-resonant frequency.

TCAC's inductance is unaffected by the current it carries. This contrasts with the situation with coils using ferromagnetic cores whose inductance tends to reach a peak at moderate field strengths before dropping towards zero as saturation approaches. Sometimes non-linearity in the magnetization curve can be tolerated; for example in switching converters. In circuits such as audio cross over networks in Hi-Fi speaker systems you must avoid distortion; then you need an air core coil. Most radio transmitters rely on air coils to prevent the production of harmonics.

Token's (TCAC) Series is custom coil windings. Please call Token Sales for your requirements to have high quality work at a reasonable tooling cost and low cost volume production, or link to Token official website "Through Hole Inductors" for more information.

Configurations

Configurations (TCAC)

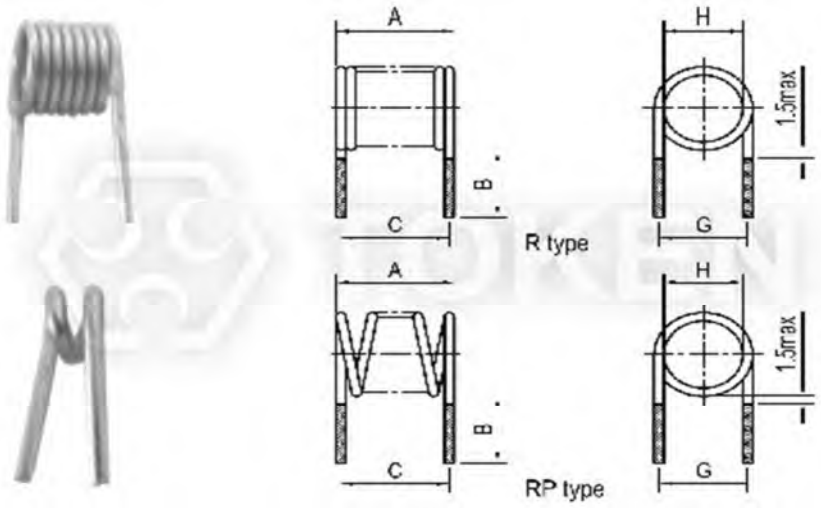

In addition, you can also provide a variety of coils according to customer requirements

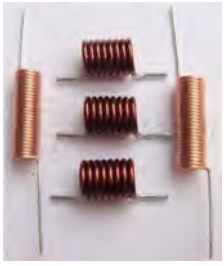


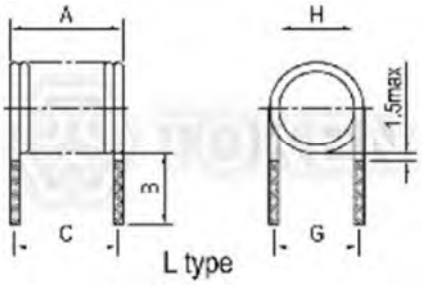

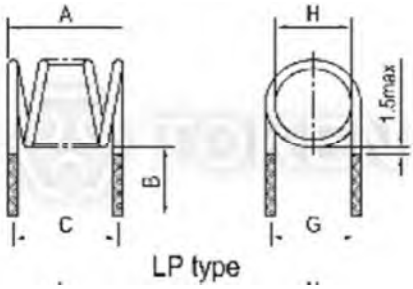

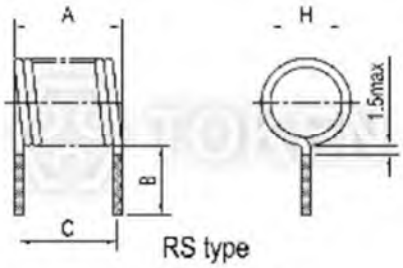

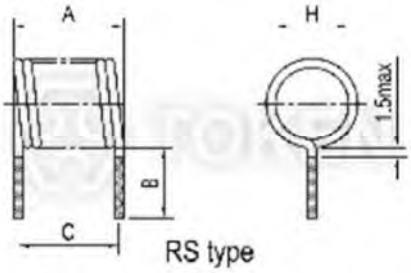

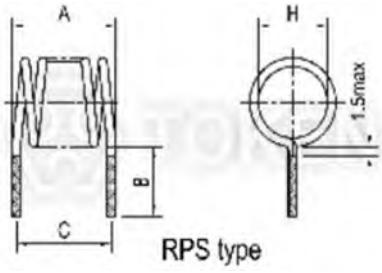

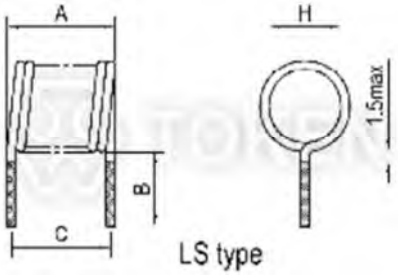

Configurations (TCAC)

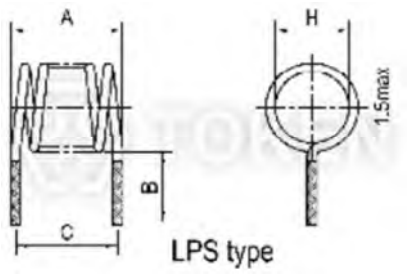

LPS type

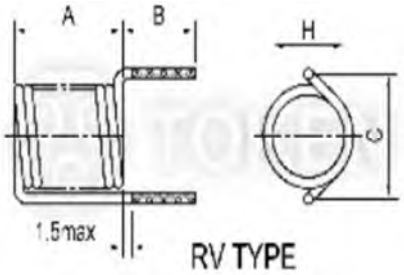

RV TYPE

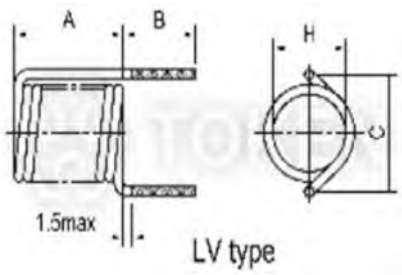

LV type

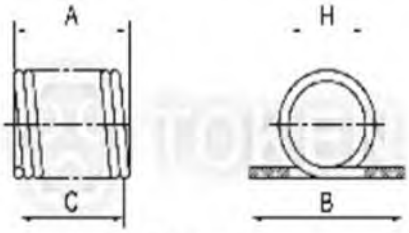

RH type

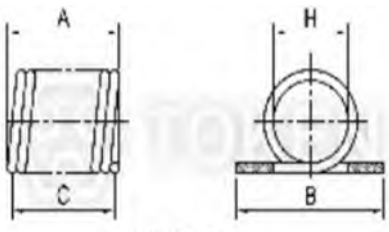

LH type

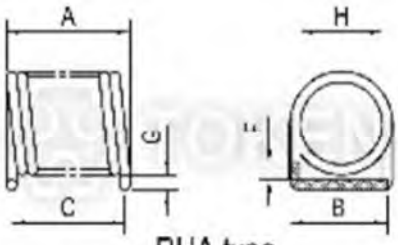

RHA type

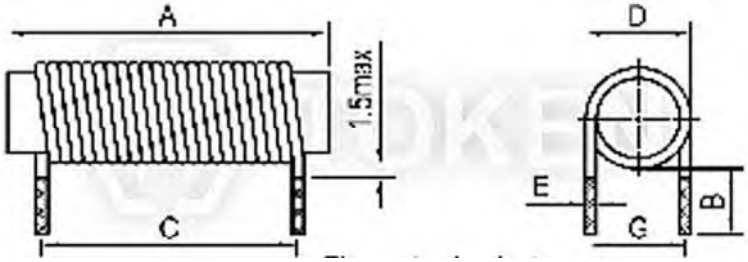

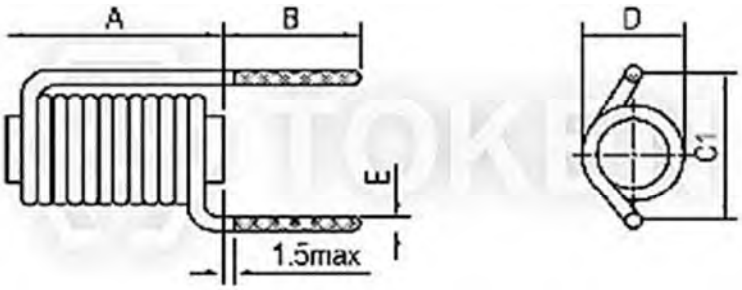

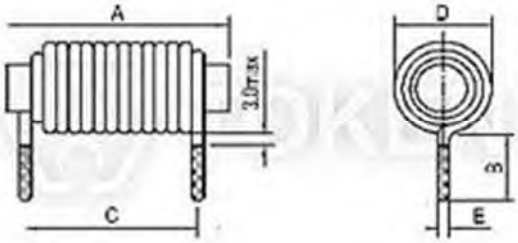

- **Note: Design as Customer's Requested Specifications.**

Order Codes

Order Codes (TCAC)

TCAC	-	R	-	0.8	×	3.1	×	8.5
Part Number		Type of Winding		Wire Diameter(mm)		Inner Diameter(mm)		Number of Turns
TCAC		R: Clockwise winding						
		L: Counter clockwise winding						

(TCFB) Ferrite Bead Filter

Product Introduction

Introduction (TCFB)

Features :

- Low cost, high reliability.
- Reducing radio frequency interference and noise.

Applications :

- VGA card, EGA card, Mother board, TV game.

Token's Ferrite Beads Filter Filtering Radio Frequency Interference and Noise. Ferrite bead is a kind of anti-jamKHzg applications the fastest growing components, cheap, easy to use, filtering high-frequency noise were improved significantly.

Ferrite beads commonly used in filtering and electromagnetic noise reduction, Token's Ferrite Beads (TCFB) series manufactured by using iron, nickel, and zinc oxide mixture made with high resistivity and high magnetic permeability. Ferrite bead in series with the signal or power path, it can be used to suppress differential mode noise.

By comparing with traditional inductors, Token's (TCFB) has better high-frequency filter characteristics. Ferrites at high frequencies showed resistance characteristics at high frequencies, equivalent to a low inductor quality factor, it can be quite a wide frequency range, to maintain high impedance, thereby enhancing the effectiveness of high-frequency filter.

The (TCFB) series is lead-free and RoHS compliant. Detailed specifications, both mechanical and electrical, please contact our sales representative or link to Token official website "Through Hole Inductors" for more information.

Configurations & Dimensions

Configurations & Dimensions (Unit: mm) (TCFB)

Type	A	B	C	Impedance (Ω) Min.	
				10MHz	100MHz
TCFB*2515*	2.5±0.15	1.5±0.15	0.65	5.0	20.0
TCFB*2530*	2.5±0.15	3.0±0.20	0.65	8.0	25.0
TCFB*2540*	2.5±0.15	4.0±0.20	0.65	12.0	32.0
TCFB*2575*	2.5±0.15	7.0±0.30	0.65	20.0	58.0
TCFB*3530*	3.5±0.20	3.0±0.20	0.65	13.0	65.0
TCFB*3545*	3.5±0.20	4.5±0.20	0.65	20.0	45.0
TCFB*3547*	3.5±0.20	4.7±0.20	0.65	20.0	45.0
TCFB*3550*	3.5±0.20	5.0±0.20	0.65	20.0	50.0
TCFB*3560*	3.5±0.20	6.0±0.20	0.65	20.0	80.0
TCFB*3578*	3.5±0.20	7.8±0.30	0.65	28.0	90.0
TCFB*3583*	3.5±0.20	8.3±0.30	0.65	30.0	100.0
TCFB*3590*	3.5±0.20	9.0±0.40	0.65	60.0	100.0
TCFB*3510*	3.5±0.20	10.0±0.4	0.65	50.0	130.0
TCFB*3512*	3.5±0.20	12.0±0.5	0.65	45.0	145.0
TCFB*3514*	3.5±0.20	14.0±0.5	0.65	60.0	150.0

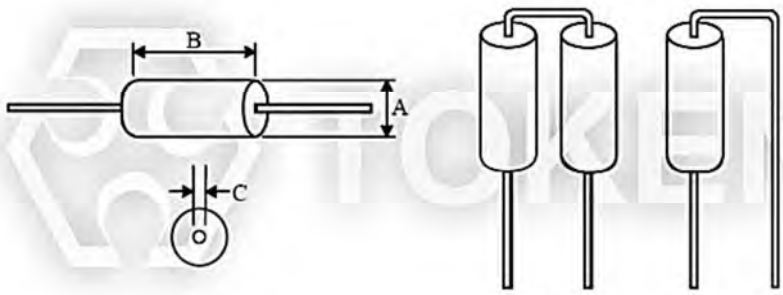

Dimensions (TCFB) Filtering High-Frequency Noise

- **Note: Only available some sizes for Radial Double & Single core type.**

Order Codes

Order Codes (TCFB)

TCFB	A	3547	TB
Part Number	Form	Outside Diameter "A" & Length "B"	Package
TCFB	A Axial Type		P Bulk
	D Radial double core type		TR Taping Reel
	S Radial single core type		TB Tapping Box

(TCWB) Inductor Filter Coils Wide Band Choke

Product Introduction

Excellent EMI Suppression Capability Wide Band Choke Coils (Inductor Filter).

Features :

- Ferrite core construction of low cost.

Applications :

- VGA card, EGA card, Mother board, TV game.

Broadband choke inductors, also known as choke coils, are a common mode ferrite as the core of the interference suppression devices. It consists of two same sizes, the same number of turns of coils, symmetrically wound on the same ferrite toroidal cores, and forKHzg a four-terKHzal device.

Shown on the common-mode signal inhibits the growth of large inductor, but for differential-mode signal showing a small leakage inductance is almost ineffective. Choke coils used in a balanced circuit can effectively suppress common mode interference signals (such as lightning interference), while the normal transmission line differential-mode signal has no effect.

Token's TCWB series use of insulation between the coil cores winding method. To ensure that the transient over-voltage under the action of short circuit breakdown does not occur. And when the instantaneous high currents flowing through the coil, the core is not saturated. The wide band choke cores mainly used in the PC boards to filters the EMI from the outsides.

Token utilizes the latest winding technology reducing parasitic capacitance of the coil and enhancing the ability of transient over-voltage. Token Electronics will also produce devices outside these specifications to meet customer requirements, with comprehensive application engineering and design support available for customers worldwide. Contact us with your specific needs. For more information, please link to Token official website “Through Hole Inductors”.

Configurations & Dimensions

Configurations & Dimensions (Unit: mm) (TCWB)

Type	ΦA ± 0.5	B ± 0.5	C ± 3.0	ΦD ± 0.05
TCWBR6H - 1.5Ts	6.0	10.0	25.0	0.5 / 0.6
TCWBR6H - 2.5Ts	6.0	10.0	25.0	0.5 / 0.6
TCWBR6H - 3.0Ts	6.0	10.0	25.0	0.5 / 0.6
TCWBR6H - 1.5+1.5Ts	6.0	10.0	25.0	0.5 / 0.6

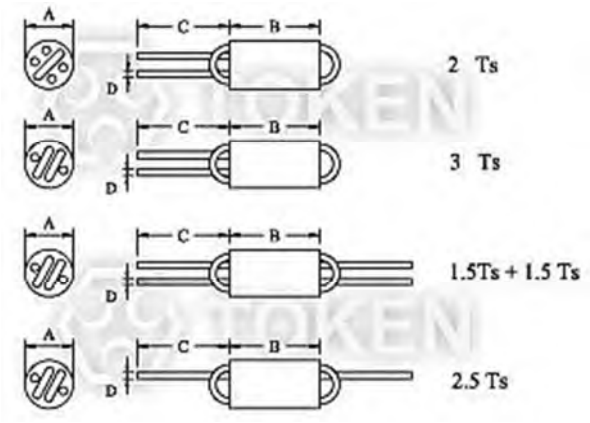

Broadband Chokes (TCWB) Dimensions

- **Note: Design as Customer's Requested Specifications.**

Order Codes

Order Codes (TCWB)

TCWB	R6H	-	2.5
Part Number	Hole		No. of Turns
TCWB	R6H: 6 holes		
	R8H: 8 holes		

(TCAL) Fixed Inductors

Product Introduction

Introduction (TCAL)

Features :

- TV, VCR.
- Computer Devices
- Electronics products.
- Communication equipment.

Applications :

- Low Cost.
- Coating epoxy resin that ensures the humidity resistance to be long life.

Token fixed inductors meet the needs of a variety of manufacturing methods. Token (TCAL) fixed inductor utilizes the latest winding technology with special core material, sturdy construction, outer layer of epoxy resin processing, high Q value and self-resonance frequency, wide inductance range, high reliability, and low price.

The (TCAL) series is ideal for consumer electronics such as digital set-top boxes (DVB), digital video disc players (DVD), video cassette recorders (VCR), television (TV), computers, audio equipment, mobile communications, telephone, and various general-purpose electronic applications.

Token highly efficient automated production processes offer a full range of high-quality inductors products suitable for automatic plug-in operation. The (TCAL) provides 0204,0307,0410, and 0510 size varieties of different forKHzg, such as Normal & Short Form, F ForKHzg, U ForKHzg, Pana ForKHzg, and bulk products to meet the needs of a variety of manufacturing methods.

Token (TCAL) through hole inductors are full line confirKHzg with RoHS specifications, Pb-free standards. Provide a complete inductor size and full range inductance, and custom parts are available on request. Token will also produce devices outside these specifications to meet specific customer requirements, contact us with your specific needs. For more information, please link to Token official website "Through Hole Inductors".

Normal ForKHzg

Normal Form & Short Form (TCAL)

Type	Φ A(Max.)	B(Max.)	C ± 3.0	Φ D ± 0.05	E ± 1.5
TCALN0204	2.8	5.0	29.5	0.50	62.5
TCALS0204	2.8	5.0	16.0	0.50	36.5
TCALN0307	3.0	7.0	28.0	0.50	62.5
TCALS0307	3.0	7.0	15.0	0.50	36.5
TCALN0410	4.0	10.0	26.0	0.65	62.5
TCALS0410	4.0	10.0	14.0	0.65	36.5
TCALN0510	5.0	10.0	26.0	0.65	62.5
TCALS0510	5.0	10.0	14.0	0.65	36.5

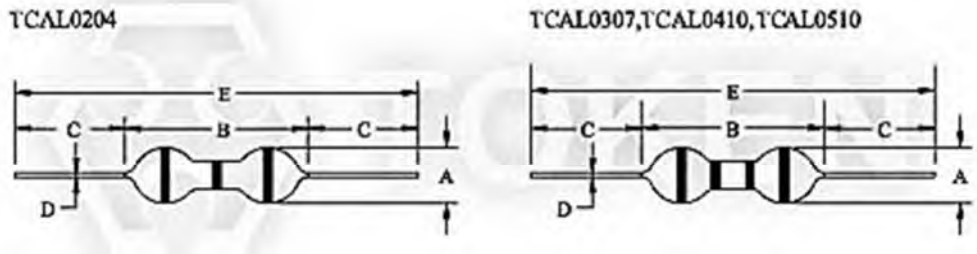

Normal Form & Short Form (TCAL) Dimensions

F ForKHzg

F ForKHzg (TCAL)

Sym.	TCALFB0204	TCALFB0307	TCALFB0410	TCALFB0510
A (Max.)	2.80	3.00	4.00	5.00
B (Max.)	5.00	7.00	10.00	10.00
C (Max.)	6.00	6.00	6.00	6.00
D (Min.)	3.60	3.60	4.00	4.00
W ± 0.05	0.50 Φ	0.50 Φ	0.65 Φ	0.65 Φ

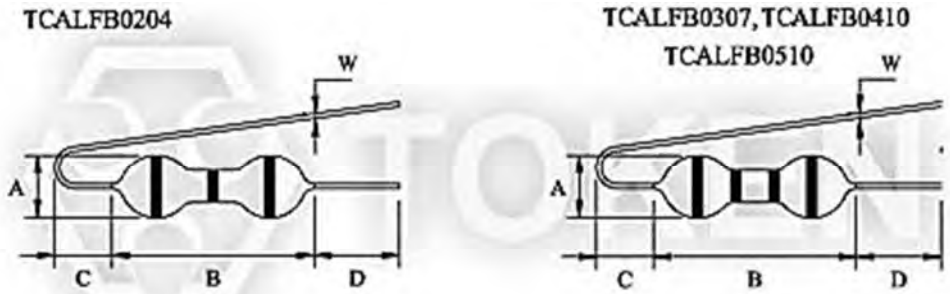

F ForKHzg (TCAL) Dimensions

U ForKHzg

U ForKHzg (TCAL)

Sym.	TCALUB0204	TCALUB0307	TCALUB0410	TCALUB0510
A (Max.)	2.80	3.00	4.00	5.00
B (Max.)	5.00	7.00	10.00	10.00
C (Min.)	3.60	3.60	3.60	3.60
F	6 ~ 15	10 ~ 20	12.5 ~ 20	12.5 ~ 20
W ± 0.05	0.50 Φ	0.50 Φ	0.65 Φ	0.65 Φ

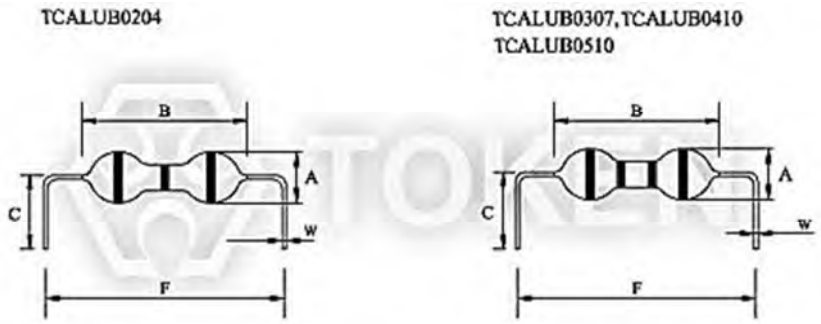

U ForKHzg (TCAL) Dimensions

Pana ForKHzg

Pana ForKHzg (TCAL 0307 Series)

A	B	C	D0	F	H	H0	H1	h	h1
3.00 (Max.)	7.00 (Max.)	3.00 +0.00 -1.00	4.00±0.3	5.00 +0.80 -0.20	19.00 +1.00 -0.30	16.00 ±0.5	28.50 (Max.)	0.00 ±2.0 (±5°)	0.00 ±2.0 (±5°)

P	P0	P1	P2	T	W	W0	W1	W2	
12.7±1.0	12.7±0.3	3.85±0.7	6.35±1.3	0.7±0.2	18.00 +1.00 -0.50	13.00±1.0	9.00 +0.75 -0.50	4.00 (Max.)	

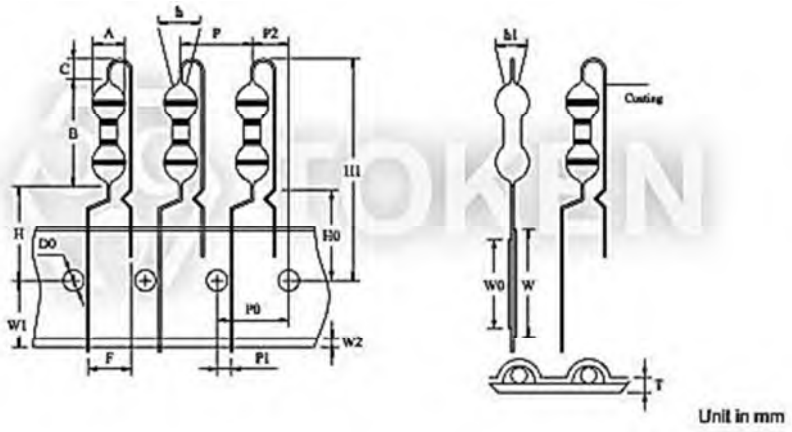

Pana ForKHzg (TCAL) Dimensions

Reel & Packing

Dimensions of Tape & Reel Axial Lead Type (TCAL)

Sym.	Dimensions	Sym.	Dimensions	Sym.	Dimensions
A	52.00 ± 1.50	E	0.00 ± 0.50	T'	45.00 ± 0.50
A'	26.00 ± 1.50	F	1.00 (Max.)	W	76.00 ± 0.50
B	5.00 ± 0.50	G	1.00 (Max.)	W'	50.00 ± 0.50
C	6.00 ± 1.00	K	355.00 ± 0.50		
D	26.00 ± 0.50	R	15.00 ± 0.50		
D'	13.00 ± 0.50	T	71.00 ± 0.50		

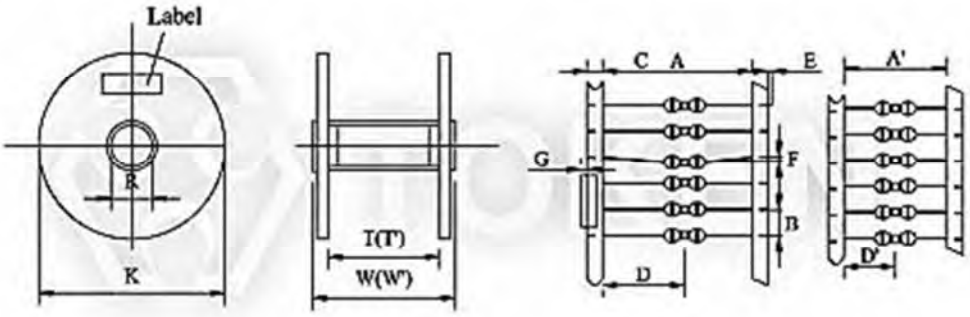

Axial Lead Type (TCAL) Dimensions of Tape & Reel

Packing Unit for Reel Axial Lead Type (TCAL)

Item	TCAL0204	TCAL0307	TCAL0410	TCAL0510
Q' TY/ Reel	5,000 PCS	5,000 PCS	5,000 PCS	3,000 PCS
GW/Reel (Approx.)	1.4 Kgm	1.6 Kgm	2.0 Kgm	2.0 Kgm
Q' TY/CTN.	25,000 PCS	25,000 PCS	25,000 PCS	15,000 PCS
NW/CTN. (Approx.)	7.0 Kgm	8.0 Kgm	10.0 Kgm	10.0 Kgm
GW/CTN. (Approx.)	8.0 Kgm	9.0 Kgm	11.0 Kgm	11.0 Kgm
Carton Size (mm)	397 × 397 × 479	397 × 397 × 479	397 × 397 × 479	397 × 397 × 479

Box & Packing

Dimensions of Ammo Box Axial Lead Type (TCAL)

Sym.	Dimensions	Sym.	Dimensions	Sym.	Dimensions
A	74.00 ± 0.30	B	108.00 ± 0.30	C	260.00 ± 0.30
A'	48.00 ± 0.30	B'	105.00 ± 0.30	C'	255.00 ± 0.30

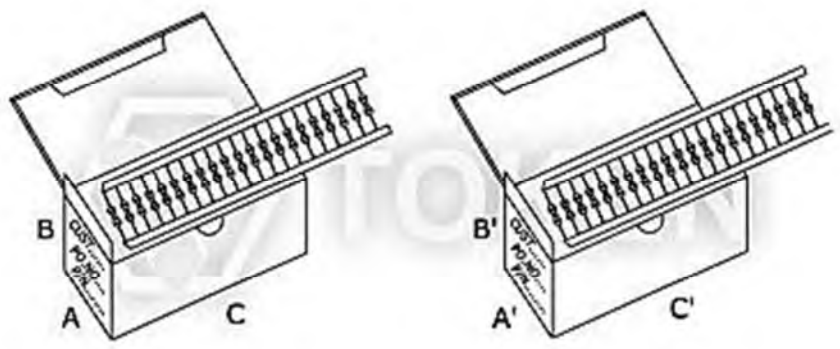

Axial Lead Type (TCAL) Dimensions of Ammo Box

Packing Unit for Box Axial Lead Type (TCAL)

Item	TCAL0204	TCAL0307	TCAL0410	TCAL0510
Q' TY / Ammo Box	3,000 PCS	3,000 PCS	2,000 PCS	1,500 PCS
GW / Box(Approx.)	0.8 KGM	0.9 KGM	1.0 KGM	0.7 KGM
Q' TY / CTN.	30,000 PCS	30,000 PCS	20,000 PCS	10,000 PCS
NW / CTN. (Approx.)	6.0 Kgm	7.0 Kgm	8.0 Kgm	5.0 Kgm
GW / CTN.(Approx.)	8.0 Kgm	9.0 Kgm	10.0 Kgm	7.0 Kgm

Packing Unit for Bulk

Packing Unit for Bulk Axial Lead Type (TCAL)

Item	TCAL0204	TCAL0307	TCAL0410	TCAL0510
Q' TY / Bag	1,000 PCS	1,000 PCS	1,000 PCS	500 PCS
GW / Bag (Approx.)	0.1 Kgm	0.15 Kgm	0.3 Kgm	0.3 Kgm

How to Select a fixed inductor

How to select a fixed inductor

Perfectly, inductors should have zero resistance and capacitance. This is not practically possible, as the conducting copper wires, used for through hole inductors, have small internal resistance.

Important criteria for the selection are:

- **Inductance Range (H):**
  The rated inductance range of the inductor. This is designated by ±10% of the inductance.
- **Quality Factor (Q):**
  The Q value of an inductor is a measure of the relative losses in an inductor. The Q is also known as the "quality factor" and is technically defined as the ratio of inductive reactance to effective resistance.
- **Self-Resonant Frequency (SRF):**
  The frequency at which the inductor's distributed capacitance resonates with the inductance. It is at this frequency that the inductance is equal to the capacitance and they cancel each other. The inductor will act purely resistive with a high impedance at the SRF point.
- **Permissible DC Current:**
  Measured in Ohms, it is the maximum DC current that the inductor should be exposed to.

TCAL0204 Characteristics

Characteristics (TCAL0204)

Part Number	Inductance(μH)	Q(Min.)	Freq.(MHz)	SRF(MHz)(Min.)	DCR(Ω)(Max.)	IDC(mA)(Max.)
TCAL**0204-R22M	0.22±20%	40	25.2	175	0.20	705
TCAL**0204-R27M	0.27±20%	40	25.2	160	0.22	670
TCAL**0204-R33M	0.33±20%	40	25.2	150	0.24	645
TCAL**0204-R39M	0.39±20%	50	25.2	150	0.27	605
TCAL**0204-R47M	0.47±20%	50	25.2	150	0.30	575
TCAL**0204-R56M	0.56±20%	50	25.2	150	0.34	540
TCAL**0204-R68M	0.68±20%	50	25.2	150	0.38	510
TCAL**0204-R82M	0.82±20%	50	25.2	150	0.43	480
TCAL**0204-1R0K	1.0±10%	50	25.2	150	0.46	465
TCAL**0204-1R2K	1.2±10%	50	7.96	110	0.52	435
TCAL**0204-1R5K	1.5±10%	50	7.96	80	0.57	415
TCAL**0204-1R8K	1.8±10%	50	7.96	66	0.60	405
TCAL**0204-2R2K	2.2±10%	50	7.96	60	0.65	390
TCAL**0204-2R7K	2.7±10%	50	7.96	54	0.73	370
TCAL**0204-3R3K	3.3±10%	50	7.96	48	0.82	345
TCAL**0204-3R9K	3.9±10%	50	7.96	44	0.90	330
TCAL**0204-4R7K	4.7±10%	50	7.96	38	1.00	315
TCAL**0204-5R6K	5.6±10%	50	7.96	34	1.10	300
TCAL**0204-6R8K	6.8±10%	50	7.96	30	1.20	285
TCAL**0204-8R2K	8.2±10%	50	7.96	26	1.30	275
TCAL**0204-100K	10±10%	50	7.96	24	1.40	265
TCAL**0204-120K	12±10%	50	2.52	22	1.50	255
TCAL**0204-150K	15±10%	50	2.52	20	1.65	245
TCAL**0204-180K	18±10%	50	2.52	18	1.90	225
TCAL**0204-220K	22±10%	50	2.52	17	2.20	210
TCAL**0204-270K	27±10%	50	2.52	16	2.50	200
TCAL**0204-330K	33±10%	50	2.52	14	3.80	160
TCAL**0204-390K	39±10%	50	2.52	13	4.20	150
TCAL**0204-470K	47±10%	50	2.52	12	4.60	145
TCAL**0204-560K	56±10%	40	2.52	11	5.10	140
TCAL**0204-680K	68±10%	40	2.52	10	5.60	130
TCAL**0204-820K	82±10%	40	2.52	9.5	9.60	100
TCAL**0204-101K	100±10%	40	2.52	8.0	10.8	95
TCAL**0204-121K	120±10%	40	0.796	6.5	12.5	85
TCAL**0204-151K	150±10%	40	0.796	6.0	14.5	80
TCAL**0204-181K	180±10%	40	0.796	5.5	16.3	75
TCAL**0204-221K	220±10%	40	0.796	5.0	20.0	70

TCAL0307 Characteristics

Characteristics (TCAL0307)

Part Number	Inductance(μH)	Q(Min.)	Freq.(MHz)	SRF(MHz)(Min.)	DCR(Ω)(Max.)	IDC(mA)(Max.)
TCAL0307-R22M**	0.22±20%	30	25.2	380	0.075	1150
TCAL0307-R27M**	0.27±20%	30	25.2	360	0.08	1110
TCAL0307-R33M**	0.33±20%	30	25.2	350	0.08	1110
TCAL0307-R39M**	0.39±20%	30	25.2	320	0.09	1000
TCAL0307-R47M**	0.47±20%	30	25.2	300	0.10	1000
TCAL0307-R56M**	0.56±20%	30	25.2	280	0.11	950
TCAL0307-R68M**	0.68±20%	30	25.2	250	0.12	900
TCAL0307-R82M**	0.82±20%	30	25.2	200	0.12	900
TCAL0307-1R0K**	1.0±10%	40	25.2	180	0.15	815
TCAL0307-1R2K**	1.2±10%	40	7.96	165	0.18	740
TCAL0307-1R5K**	1.5±10%	40	7.96	150	0.20	700
TCAL0307-1R8K**	1.8±10%	50	7.96	125	0.23	655
TCAL0307-2R2K**	2.2±10%	50	7.96	110	0.25	630
TCAL0307-2R7K**	2.7±10%	50	7.96	95	0.28	595
TCAL0307-3R3K**	3.3±10%	50	7.96	70	0.30	575
TCAL0307-3R9K**	3.9±10%	45	7.96	65	0.32	555
TCAL0307-4R7K**	4.7±10%	45	7.96	50	0.35	530
TCAL0307-5R6K**	5.6±10%	45	7.96	40	0.40	500
TCAL0307-6R8K**	6.8±10%	40	7.96	30	0.45	470
TCAL0307-8R2K**	8.2±10%	40	7.96	28	0.55	425
TCAL0307-100K**	10±10%	40	7.96	22	0.72	370
TCAL0307-120K**	12±10%	40	2.52	20	0.80	350
TCAL0307-150K**	15±10%	50	2.52	16	0.88	335
TCAL0307-180K**	18±10%	50	2.52	15	1.00	315
TCAL0307-220K**	22±10%	50	2.52	13	1.20	285
TCAL0307-270K**	27±10%	50	2.52	11	1.35	270
TCAL0307-330K**	33±10%	50	2.52	10	1.50	255
TCAL0307-390K**	39±10%	50	2.52	9.5	1.70	240
TCAL0307-470K**	47±10%	60	2.52	8.5	2.30	205
TCAL0307-560K**	56±10%	60	2.52	7.5	2.60	195
TCAL0307-680K**	68±10%	60	2.52	6.5	2.90	185
TCAL0307-820K**	82±10%	60	2.52	6.0	3.20	175
TCAL0307-101K**	100±10%	60	2.52	5.5	3.50	165
TCAL0307-121K**	120±10%	60	0.796	5.4	3.80	160
TCAL0307-151K**	150±10%	60	0.796	4.75	4.40	150
TCAL0307-181K**	180±10%	60	0.796	4.35	5.00	140
TCAL0307-221K**	220±10%	60	0.796	4.0	5.70	130
TCAL0307-271K**	270±10%	60	0.796	3.7	6.50	120
TCAL0307-331K**	330±10%	60	0.796	3.4	9.50	100
TCAL0307-391K**	390±10%	60	0.796	2.8	10.5	95
TCAL0307-471K**	470±10%	60	0.796	2.55	11.6	90
TCAL0307-561K**	560±10%	60	0.796	2.35	13.0	85
TCAL0307-681K**	680±10%	60	0.796	2.0	18.0	75
TCAL0307-821K**	820±10%	60	0.796	1.5	23.0	65
TCAL0307-102K**	1000±10%	60	0.796	1.2	26.0	60

TCAL0410 Characteristics

Characteristics (TCAL0410)

Part Number	Inductance(μH)	Q(Min.)	Freq.(MHz)	SRF(MHz)(Min.)	DCR(Ω)(Max.)	IDC(mA)(Max.)
TCAL0410-R22M**	0.22±20%	25	25.2	380	0.21	880
TCAL0410-R27M**	0.27±20%	25	25.2	340	0.24	800
TCAL0410-R33M**	0.33±20%	25	25.2	300	0.28	750
TCAL0410-R39M**	0.39±20%	25	25.2	280	0.32	680
TCAL0410-R47M**	0.47±20%	25	25.2	250	0.36	650
TCAL0410-R56M**	0.56±20%	25	25.2	230	0.41	600
TCAL0410-R68M**	0.68±20%	25	25.2	210	0.47	550
TCAL0410-R82M**	0.82±20%	45	25.2	172	0.17	980
TCAL0410-1R0K**	1.0±10%	45	25.2	157	0.19	920
TCAL0410-1R2K**	1.2±10%	50	7.96	144	0.21	880
TCAL0410-1R5K**	1.5±10%	50	7.96	131	0.23	830
TCAL0410-1R8K**	1.8±10%	55	7.96	121	0.25	790
TCAL0410-2R2K**	2.2±10%	55	7.96	110	0.28	750
TCAL0410-2R7K**	2.7±10%	60	7.96	100	0.30	720
TCAL0410-3R3K**	3.3±10%	60	7.96	94	0.34	670
TCAL0410-3R9K**	3.9±10%	60	7.96	86	0.37	640
TCAL0410-4R7K**	4.7±10%	60	7.96	80	0.39	620
TCAL0410-5R6K**	5.6±10%	60	7.96	74	0.43	590
TCAL0410-6R8K**	6.8±10%	60	7.96	68	0.48	550
TCAL0410-8R2K**	8.2±10%	60	7.96	53	0.52	530
TCAL0410-100K**	10±10%	60	7.96	45	0.58	500
TCAL0410-120K**	12±10%	60	2.52	34	0.63	480
TCAL0410-150K**	15±10%	60	2.52	20	0.72	460
TCAL0410-180K**	18±10%	60	2.52	14	0.77	430
TCAL0410-220K**	22±10%	60	2.52	9.9	0.84	410
TCAL0410-270K**	27±10%	50	2.52	7.6	0.94	390
TCAL0410-330K**	33±10%	50	2.52	6.3	1.03	370
TCAL0410-390K**	39±10%	50	2.52	6.3	1.12	350
TCAL0410-470K**	47±10%	50	2.52	6.3	1.22	340
TCAL0410-560K**	56±10%	40	2.52	6.2	1.34	320
TCAL0410-680K**	68±10%	40	2.52	5.7	1.47	305
TCAL0410-820K**	82±10%	35	2.52	5.3	1.62	290
TCAL0410-101K**	100±10%	35	2.52	4.8	1.80	275
TCAL0410-121K**	120±10%	60	0.796	3.8	3.70	185
TCAL0410-151K**	150±10%	60	0.796	3.5	4.20	175
TCAL0410-181K**	180±10%	60	0.796	3.3	4.60	165
TCAL0410-221K**	220±10%	60	0.796	3.0	5.10	155
TCAL0410-271K**	270±10%	60	0.796	2.8	5.80	145
TCAL0410-331K**	330±10%	60	0.796	2.6	6.40	137
TCAL0410-391K**	390±10%	60	0.796	2.4	7.00	133
TCAL0410-471K**	470±10%	60	0.796	2.25	7.70	126
TCAL0410-561K**	560±10%	60	0.796	2.1	8.50	120
TCAL0410-681K**	680±10%	55	0.796	1.95	9.40	113
TCAL0410-821K**	820±10%	55	0.796	1.85	10.5	100
TCAL0410-102K**	1000±10%	50	0.796	1.4	14.0	100

TCAL0510 Characteristics

Characteristics (TCAL0510)

Part Number	Inductance(μH)	Q(Min.)	Freq.(MHz)	SRF(MHz)(Min.)	DCR (Ω)(Max.)	RDC(mA)(Max.)
TCAL0510-R56M**	0.56±10%	50	25.2	280	0.14	1150
TCAL0510-R68K**	0.68±10%	50	25.2	250	0.15	1100
TCAL0510-R82M**	0.82±10%	50	25.2	220	0.22	900
TCAL0510-1R0K**	1.0±10%	50	25.2	200	0.29	785
TCAL0510-1R2K**	1.2±10%	33	7.96	180	0.42	650
TCAL0510-1R5K**	1.5±10%	33	7.96	160	0.50	600
TCAL0510-1R8K**	1.8±10%	33	7.96	150	0.65	525
TCAL0510-2R2K**	2.2±10%	33	7.96	135	0.95	435
TCAL0510-2R7K**	2.7±10%	33	7.96	120	1.5	385
TCAL0510-3R3K**	3.3±10%	33	7.96	110	2.0	300
TCAL0510-3R9K**	3.9±10%	33	7.96	100	2.3	280
TCAL0510-4R7K**	4.7±10%	33	7.96	90	2.8	260
TCAL0510-5R6K**	5.6±10%	45	7.96	60	0.32	495
TCAL0510-6R8K**	6.8±10%	45	7.96	55	0.5	395
TCAL0510-8R2K**	8.2±10%	45	7.96	50	0.6	360
TCAL0510-100K**	10±10%	45	7.96	45	0.9	290
TCAL0510-120K**	12±10%	60	2.52	42	1.2	265
TCAL0510-150K**	15±10%	65	2.52	40	1.7	240
TCAL0510-180K**	18±10%	65	2.52	34	2.3	185
TCAL0510-220K**	22±10%	65	2.52	30	2.6	175
TCAL0510-270K**	27±10%	45	2.52	25	2.0	170
TCAL0510-330K**	33±10%	45	2.52	19	2.3	165
TCAL0510-390K**	39±10%	45	2.52	15	2.5	165
TCAL0510-470K**	47±10%	45	2.52	14	2.6	165
TCAL0510-560K**	56±10%	50	2.52	12	3.0	164
TCAL0510-680K**	68±10%	50	2.52	11	3.3	156
TCAL0510-820K**	82±10%	50	2.52	10	3.9	143
TCAL0510-101K**	100±10%	50	2.52	9	4.5	133
TCAL0510-121K**	120±10%	60	0.796	8.5	5.2	124
TCAL0510-151K**	150±10%	40	0.796	7.8	6.18	114
TCAL0510-181K**	180±10%	60	0.796	7.0	6.8	108
TCAL0510-221K**	220±10%	60	0.796	6.2	7.5	103
TCAL0510-271K**	270±10%	60	0.796	5.6	8.2	103
TCAL0510-331K**	330±10%	60	0.796	5.0	9.1	102
TCAL0510-391K**	390±10%	60	0.796	4.5	10	102
TCAL0510-471K**	470±10%	60	0.796	4.0	11	100
TCAL0510-561K**	560±10%	60	0.796	3.6	12.3	85
TCAL0510-681K**	680±10%	60	0.796	3.6	13.7	81
TCAL0510-821K**	820±10%	60	0.796	1.32	3.1	180
TCAL0510-102K**	1000±10%	60	0.796	1.25	4.1	156

Order Codes

Order Codes (TCAL)

TCAL	N	TR	0204	-	R10	M
Part Number	Form	Package	Size		Inductance	Tolerance
TCAL	N Normal Form	P Bulk	0204 2.8×5.0mm		R10 0.10μH	J 5%
	S Short Form	TR Taping Reel	0307 3.0×7.0mm		1R0 1.00μH	K 10%
	F F ForKHzg		0410 4.0×10.0mm		100 10.00μH	M 20%
	U U ForKHzg	TB Taping Box	0510 5.0×10.0mm		101 100.00μH	
	P Pana ForKHzg without coating of lead wire				102 1000.00μH	
	PC Pana ForKHzg with coating of lead wire					

(TCRB) Radial High Rated Current Choke

Product Introduction

Radial High Rated Current Chokes with open magnetic circuit construction design makes better TCR.

Features :
- Open magnetic circuit construction
- Low cost and high reliability

Applications :
- Video Camera, Video Tape Recorder,
- Notebook, Inkjet Printer, Copying Machine,
- Display Monitor, Cellular Phone, ADSL Modem,
- Microwave Oven, Lighting and Car Electronics.

Token TCRB series structure with open magnetic circuit construction design and protect by UL or PVC Heat-shrinkable tube. The TCRB features with small size, space savings, low cost, wide inductance range, high Q value, high availability of a large induced current, high self-resonance frequency, small magnetic flux leakage and so on.

Choke coils, also known as: Choke, differential mode inductors, is used to limit the alternating current through the coil, high-frequency and low frequency choke coils.

The TCRB is idael for broadband modems, game consoles, lighting equipment, notebook computers, inkjet printers, photocopying machines, color TV, VCR, camera, microwave ovens, display monitors, mobile phones, automotive electronics products.

Token will also produce devices outside these specifications to meet specific customer requirements, please contact our sales or link to Token official website "Through Hole Inductors" for more information.

Configurations & Dimensions

Configurations & Dimensions (Unit: mm) (TCRB)

Part NO	A±1.0	B±1.0	C	D(Ref)	E(Ref)	F(Ref)
TCRB0605	6.0	5.5	4.0	0.5	15	FIG1
TCRB0606	6.0	6.5	4.0	0.5	15	FIG1
TCRB0805	7.8	6.0	5.0	0.6	15	FIG1
TCRB0807	7.8	7.5	5.0	0.6	15	FIG1
TCRB0809	7.8	9.5	5.0	0.6	15	FIG1
TCRB1006	10	6.5	5.0	0.65	15	FIG2(4.0±0.5)
TCRB1008	10	8.5	5.0	0.65	15	FIG2(4.0±0.5)
TCRB1010	10	10.5	5.0	0.65	15	FIG2(4.0±0.5)
TCRB1014	10	14.5	5.0	0.65	15	FIG1

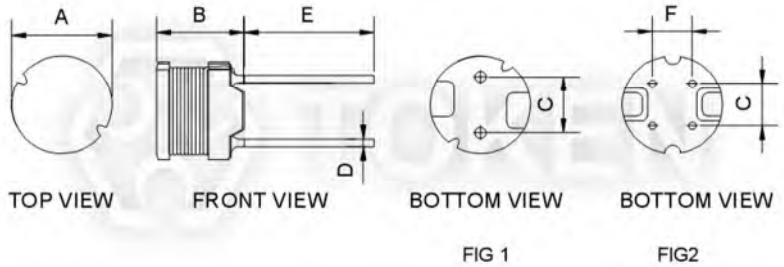

- **Note: Design as Customer's Requested Specifications.**

TCRB 0*

Electrical Characteristics (TCRB 0*)

MARKING	Inductance (μH)	TCRB0605		TCRB0606		TCRB0805		TCRB0807		TCRB0809	
		DCR(Ω) Max	IDC (A)	DCR(Ω) Max	IDC (A)	DCR(Ω) Max	IDC (A)	DCR(Ω) Max	IDC (A)	DCR(Ω) Max	IDC (A)
100	10					0.07	2.5	0.05	2.9	0.04	2.6
120	12					0.08	2.4	0.06	2.5	0.04	2.6
150	15					0.09	2.1	0.07	2.2	0.05	2.1
180	18					0.10	2.0	0.08	1.9	0.05	2.0
220	22	0.18	0.90	0.11	1.27	0.12	1.7	0.09	1.8	0.06	1.7
270	27	0.21	0.81	0.14	1.14	0.14	1.6	0.11	1.7	0.06	1.6
330	33	0.27	0.74	0.17	1.03	0.17	1.4	0.13	1.5	0.07	1.4
390	39	0.29	0.68	0.19	0.95	0.21	1.3	0.14	1.3	0.08	1.4
470	47	0.34	0.62	0.23	0.87	0.24	1.2	0.15	1.3	0.1	1.3
560	56	0.42	0.57	0.26	0.80	0.31	1.1	0.18	1.2	0.11	1.2
680	68	0.48	0.51	0.28	0.72	0.34	1.0	0.2	1.1	0.14	1.1
820	82	0.55	0.47	0.39	0.66	0.4	0.93	0.24	1.0	0.16	1.0
101	100	0.68	0.42	0.43	0.59	0.52	0.81	0.28	0.89	0.19	0.9
121	120	0.77	0.39	0.54	0.54	0.59	0.76	0.36	0.81	0.22	0.82
151	150	0.95	0.35	0.64	0.48	0.71	0.67	0.42	0.72	0.27	0.74
181	180	1.15	0.32	0.74	0.44	0.89	0.62	0.57	0.66	0.31	0.71
221	220	1.30	0.29	0.96	0.40	1.04	0.54	0.63	0.57	0.38	0.64
271	270	1.55	0.26	1.12	0.36	1.28	0.49	0.88	0.51	0.53	0.57
331	330	2.18	0.23	1.48	0.33	1.47	0.44	1.05	0.46	0.61	0.51
391	390	2.47	0.21	1.66	0.30	1.67	0.41	1.17	0.44	0.69	0.48
471	470	2.92	0.20	1.91	0.27	1.95	0.38	1.34	0.41	0.89	0.43
561	560	3.97	0.18	2.31	0.25	2.83	0.35	1.72	0.36	1.01	0.40
681	680	4057	0.16	2.67	0.23	3.25	0.32	1.96	033	1.18	0.35
821	820	5.28	0.15	3.10	0.21	3.82	0.31	2.56	0.3	1.57	0.32
102	1000					5.28	0.25	2.94	0.27	1.84	0.30
122	1200					6.03	0.23	4.04	0.24	2.10	0.27
152	1500					7.15	0.21	4.70	0.22	2.80	0.23
182	1800					8.26	0.20	5.05	0.20	3.21	0.21
222	2200					11.1	0.18	6.25	0.18	4.21	0.19
272	2700					13.1	0.16	8.72	0.16	4.94	0.17
332	3300					15.9	0.14	10.6	0.15	6.16	0.15
392	3900					18.0	0.13	14.2	0.14	6.84	0.14
472	4700					32.9	0.12	16.7	0.12	7.89	0.13
562	5600					26.8	0.11	18.7	0.11	11.5	0.12
682	6800					31.7	0.098	21.8	0.10	13.2	0.11
822	8200					46.5	0.088	28.7	0.093	15.3	0.10
103	10000					55.7	0.081	33.0	0.084	22.0	0.089
123	12000									25.0	0.073
153	15000									29.1	0.068
183	18000									38.9	0.066
223	22000									44.9	0.059
273	27000									55.7	0.052
333	33000									64.2	0.048
393	39000									74.2	0.042
473	47000									96.4	0.038

Note:

- **Test Freq.: 1KHz / 0.25V.**
- **Operating Temp.: -40℃ ~ +85℃.**
- **Inductance drop = 10% typ. at IDC.**

TCRB 10*

Electrical Characteristics (TCRB 10*)

STAMP	Inductance (μH)	TCRB1006		TCRB1008		TCRB1010		TCRB1014	
		DCR(Ω) Max	IDC (A)	DCR(Ω) Max	IDC (A)	DCR(Ω) Max	IDC (A)	DCR(Ω) Max	IDC (A)
100	10	0.04	3.6	0.027	4.5	0.022	5.3	0.033	4.0
150	15	0.058	2.9	0.036	3.7	0.026	4.4	0.039	3.7
180	18	0.064	2.7	0.049	3.4	0.033	4.0	0.047	3.5
220	22	0.088	2.4	0.055	3.1	0.037	3.6	0.051	3.3
270	27	0.10	2.2	0.062	2.8	0.048	3.3	0.057	3.1
330	33	0.11	2.0	0.079	2.5	0.055	2.9	0.064	2.9
390	39	0.14	1.8	0.087	2.3	0.073	2.7	0.074	2.7
470	47	0.16	1.7	0.099	2.1	0.083	2.5	0.083	2.5
680	68	0.22	1.4	0.14	1.7	0.12	2.1	0.117	2.1
820	82	0.29	1.3	0.16	1.6	0.14	1.9	0.130	1.9
101	100	0.32	1.3	0.21	1.4	0.16	1.7	0.143	1.7
151	150	0.50	1.0	0.32	1.2	0.23	1.4	0.221	1.4
181	180	0.56	0.84	0.35	1.1	0.31	1.3	0.26	1.3
221	220	0.78	0.76	0.45	0.96	0.34	1.1	0.35	1.2
331	330	1.10	0.62	0.69	0.79	0.52	0.93	0.52	1.0
391	390	1.30	0.57	0.78	0.72	0.65	0.86	0.57	0.92
471	470	1.50	0.52	1.0	0.66	0.71	0.78	0.65	0.84
561	560	1.90	0.48	1.2	0.60	1.0	0.71	0.79	0.75
681	680	2.20	0.43	1.4	0.55	1.1	0.65	0.96	0.69
821	820	2.60	0.40	1.8	0.50	1.3	0.59	1.22	0.62

Note:

- **Test Freq.: 1KHz / 0.25V.**
- **Operating Temp.: -40℃ ~ +85℃.**
- **Inductance drop = 10% typ. at IDC.**

Order Codes

Order Codes (TCRB)

TCRB	U	0605	-	220	M

Part Number	TUBE		Size		Inductance		Tolerance	
TCRB	U	UL	0605	6.0×5.5mm	1R0	1.00μH	J	5%
	P	PVC	0606	6.0×6.5mm	100	10.00μH	K	10%
	NONE	NO TUBE	0805	7.8×6.0mm	101	100.00μH	L	15%
			0807	7.8×7.5mm	102	1000.00μH	M	20%
			0809	7.8×9.5mm			N	30%
							Y	Min.

(TCRC)
Power Choke Coil Inductors

Product Introduction

Power Choke Coil Inductors limit the alternating current through the chokes.

Features :

- Ultra low cost.
- Shielded construotion.
- High current rating up to DC 33 Amp.
- High frequency range up to 1.0MHz.
- Very low DC resistance.
- All lead-free.(RoHS).

Applications :

- Motherboards for laptop and desdtop computers.
- DC/DC converter in distributed power systems or VRM Applications. Inductor for general purpose use.

Choke coils, also known as: Choke, differential mode inductors, is used to limit the alternating current through the coil, high-frequency and low frequency choke coils.

Token (TCRC) series structure with open magnetic circuit design and protect by UL or PVC Heat-shrinkable tube. The (TCRC) features with small size, high Q value, low cost, high self-resonance frequency, high availability of a large induced current, small magnetic flux leakage and so on.

The power choke (TCRC) is idael for notebook computers, inkjet printers, photocopying machines, display monitors, mobile phones, broadband modems, game consoles, color TV, VCR, camera, microwave ovens, lighting equipment, automotive electronics products.

Token will also produce devices outside these specifications to meet specific customer requirements, please contact our sales or link to Token official website "Through Hole Inductors" for more information.

Configurations & Dimensions

Configurations & Dimensions (Unit: mm) (TCRC)

Part NO	A±1.0	B±1.0	C	D(Ref)	E(Ref)	F(Ref)
TCRC0304	3.5	6.0	12	15	0.5	1.3
TCRC0406	4.5	7.0	12	15	0.6	2.0
TCRC0507	5.5	9.0	12	15	0.6	2.5
TCRC0608	6.5	10.0	12	15	0.6	3.0
TCRC0810	8.5	12.0	12	15	0.6	5.0
TCRC0912	9.5	14.0	12	15	0.6	5.0

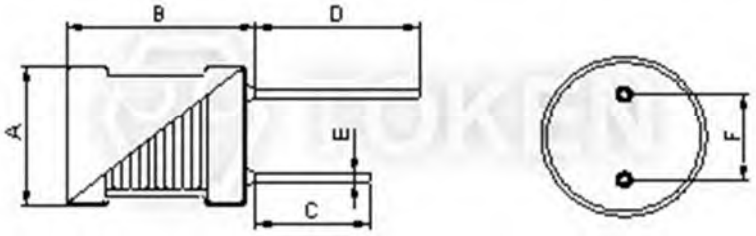

Configurations & Dimensions

- **Note: Design as Customer's Requested Specifications.**

TCRC

Electrical Characteristics (TCRC)

MARKING	Inductance (μH)	TCRC0304		TCRC0406		TCRC0507		TCRC0608		TCRC0810		TCRC0912	
		DCR (Ω) Max	Isat (mA)	DCR (Ω) Max	Isat (mA)	DCR (Ω) Max	Isat (mA)	DCR (Ω) Max	Isat (mA)	DCR (Ω) Max	Isat (mA)	DCR (Ω) Max	Isat (mA)
1R0	1.0	0.10	1000	0.10	1400	0.014	3500			0.02	3400		
1R2	1.2	0.10	1000	0.12	1200					0.02	3400		
1R5	1.5	0.10	900	0.15	1200	0.02	3000			0.02	3400		
1R8	1.8	0.10	800	0.17	1100					0.03	3300		
2R2	2.2	0.10	700	0.20	1100	0.02	2500			0.03	3000		
2R7	2.7	0.20	700	0.20	1300					0.04	3000		
3R3	3.3	0.20	650	0.22	1300	0.03	2000			0.04	3000		
3R9	3.9	0.20	500	0.24	1300					0.05	2900		
4R7	4.7	0.30	450	0.26	800	0.04	1700			0.05	2900		
5R6	5.6	0.30	400	0.28	800					0.06	2600		
6R8	6.8	0.30	350	0.30	800	0.06	1300			0.06	2500		
8R2	8.2	0.40	350	0.35	800					0.06	2000		
100	10	0.50	300	0.46	700	0.08	1000	0.09	1300	0.10	1600	0.04	2800
120	12	0.60	300	0.48	600	0.10	950	0.10	1100	0.10	1400	0.04	2700
150	15	0.60	300	0.55	600	0.11	900	0.11	1050	0.10	1300	0.05	2300
180	18	0.70	290	0.65	500	0.11	800	0.12	1000	0.11	1200	0.06	2100
220	22	0.80	270	0.72	500	0.12	700	0.12	960	0.13	1100	0.07	2000
270	27	0.90	270	0.78	400	0.14	600	0.17	920	0.14	1000	0.10	1700
330	33	2.00	260	0.87	400	0.16	550	0.19	880	0.16	900	0.12	1500
390	39	2.00	250	0.90	400	0.18	500	0.22	860	0.16	800	0.12	1400
470	47	3.00	180	0.98	400	0.20	500	0.23	830	0.16	700	0.13	1300
560	56	3.00	170	1.50	320	0.22	450	0.29	810	0.22	700	0.14	1200
680	68	3.00	170	1.90	300	0.30	450	0.37	750	0.23	600	0.15	1000
820	82	4.00	160	2.50	300	0.34	400	0.39	740	0.27	500	0.16	900
101	100	4.00	150	3.00	200	0.36	400	0.44	710	0.29	400	0.25	700
121	120	4.00	150	3.80	200	0.44	350	0.64	680	0.33	400	0.28	700
151	150	5.00	130	4.50	200	0.52	300	0.73	600	0.46	350	0.32	700
181	180	5.00	130	5.00	200	0.65	300	0.83	540	0.51	350	0.47	600
221	220	8.00	100	5.80	200	0.75	250	0.92	450	0.62	300	0.53	500
271	270	9.00	90	6.50	150	0.10	240	1.3	420	0.65	250	0.60	450
331	330	10.0	90	7.00	150	1.3	200	1.5	400	0.79	250	0.85	400
391	390	10.0	80	7.70	150	1.4	180	1.8	370	0.91	200	0.95	350
471	470	11.0	80	8.00	120	1.6	160	2.3	340	1.2	180	1.1	350
561	560	15.0	70	8.50	120	2.0	160	3.0	280	1.2	160	1.2	300
681	680	23.0	50	9.50	120	2.3	140	3.25	250	1.5	140	1.3	250
821	820	26.0	50	15	100	2.7	130	4.16	230	1.7	140	1.4	200
102	1000	29.00	50	17	100	3.1	120	4.55	210	2.0	120	2.0	200
122	1200	33.0	40	20	80	4.6	110	5.20	200	2.3	100	2.3	180
152	1500	37.0	40	22	80	5.3	100	7.54	180	2.9	80	2.9	150
182	1800	41.0	40	25	70	6.2	90	7.54	160	3.5	80	3.3	120

MARKING	Inductance (μH)	TCRC0304		TCRC0406		TCRC0507		TCRC0608		TCRC0810		TCRC0912	
		DCR (Ω) Max	Isat (mA)	DCR (Ω) Max	Isat (mA)	DCR (Ω) Max	Isat (mA)	DCR (Ω) Max	Isat (mA)	DCR (Ω) Max	Isat (mA)	DCR (Ω) Max	Isat (mA)
222	2200	46.0	30	26	60	6.8	80	8.32	150	4.2	70	4.5	110
272	2700	51.0	30	46	40	10	60	9.62	130	5.1	60	5.5	90
332	3300			50	30	12	60	10.92	130	6.1	60	5.7	80
392	3900			54	30	13	55	16.12	100	7.8	50	6.5	80
472	4700			60	30	15	55	17.81	85	11	50	7.2	60
562	5600			65	30	22	50	20.0	70	11	45	9.5	50
682	6800			72	30	25	45	27.3	65	14	45	11	50
822	8200			80	20	28	45	31.2	60	15	40	13	50
103	10000			95	10	35	35	39.0	58	20	35	16	40
123	12000					45	30	42.9	56	24	35	18	40
153	15000					52	30	65.0	53	28	35	21	40
183	18000					58	30	72.8	50	42	30	23	40
223	22000					80	20	82.55	46	43	30	33	35
273	27000					90	20	95.42	42	55	25	37	35
333	33000					135	15	135.2	38	65	25	42	35
393	39000					150	15	154.7	37	87	25	45	30
473	47000					170	15	172.9	35	98	25	52	30

Note:

- **Test Freq.: 1KHz / 0.25V.**
- **Operating Temp.: -40℃ ~ +85℃.**
- **Inductance drop = 10% typ. at IDC.**

Order Codes

Order Codes (TCRC)

TCRC	U	0304	-	1R0	M

Part Number	Tube		Size		Inductance		Tolerance	
TCRC	U	UL	0304	3.5×6.0mm	1R0	1.00μH	J	5%
	P	PVC	0406	4.5×7.0mm	100	10.00μH	K	10%
	None	No Tube	0507	5.5×9.0mm	101	100.00μH	L	15%
			0608	6.5×10.0mm	102	1000.00μH	M	20%
			0810	8.5×12.0mm			N	30%
			0912	9.0×14.0mm			Y	Min.

(TCRCS) Power Choke Coils

Product Introduction

High-power low-loss choke coil portfolio expands to cover 10μH to 120000μH.

Features :

- Magnetically shielded construction.
- Low cost and high reliability.
- All lead-free.(RoHS).

Applications :

- Notebook, inkjet printer, copying machine, display monitor.
- Cellular phone, ADSL modem, GaKHzg machine, color TV.
- Video tape recorder, Video camera, Microwave oven, lighting Andcar electronics.

The choke coil is also known as: chokes, choke inductors, or differential mode inductor used to limit the AC through the coil. Token Power Choke Coils offer high heat resistance, excellent DC bias characteristic, Hi-BS With Ferrous alloy magnetic material and great reliability at high temperatures with a high tolerance for vibration. These Power Choke Coils also have very low audible noise and are extremely efficient with low DCR and eddy current loss reduction.

Power choke inductors (TCRCS) are optimized for removing high-frequency noise in power supply. Prepareing small types for mobile devices and higher-power types, customer can select the most suitable product with the appropriate inductance and rated current.

Token Power choke inductor (TCRCS) conforms to the RoHS directive and Lead-free. Custom parts are available on request for tighter tolerances. Application of specific designs also available including different inductance and frequency specifications adjusted to requirements. Please contact our sales for more information. Please contact our sales or link to Token official website "Through Hole Inductors" for more information.

Configurations & Dimensions

Configurations & Dimensions (Unit: mm) (TCRCS)

Part NO	A(Max)	B(Max)	C(Ref)	D±0.1	P±0.5
TCRCS1009	11.5	10.5	15	0.65	5.0
TCRCS1012	11.0	13.0	15	0.65	5.0
TCRCS1014	11.0	15.0	15	0.65	5.0
TCRCS1214	13.0	15.0	15	0.8	5.0

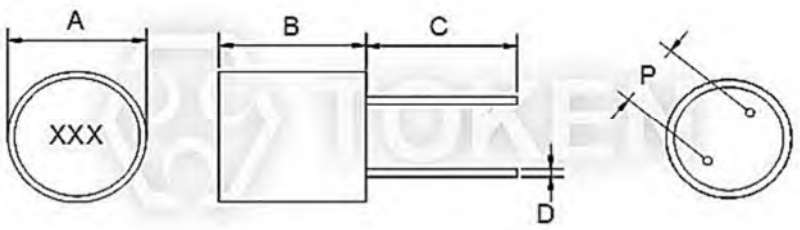

- **Note: Design according to customer's special requirement。**

TCRCS

Electrical Characteristics (TCRCS)

MARKING	Inductance (μH)	TCRCS1009		TCRCS1012		TCRCS1014		TCRCS1214	
		DCR (Ω)Max	Isat (mA)	DCR (Ω)Max	Isat (mA)	DCR (Ω)Max	Isat (mA)	DCR (Ω)Max	Isat (mA)
100	10	0.018	1000	0.027	3300	0.029	4500	0.015	4000
150	15	0.020	810	0.033	2800	0.040	3650	0.017	3800
180	18	0.023	765	0.037	2500	0.054	3200	0.020	3600
220	22	0.025	630	0.045	2250	0.060	3200	0.021	3400
270	27	0.027	495	0.051	2000	0.066	2700	0.023	3200
330	33	0.034	470	0.067	1870	0.070	2400	0.024	3000
390	39	0.039	390	0.076	1680	0.078	2250	0.027	2600
470	47	0.047	370	0.085	1500	0.086	2100	0.032	2200
560	56	0.049	325	0.094	1440	0.094	1900	0.034	2000
680	68	0.056	290	0.103	1280	0.102	1750	0.060	1800
820	82	0.061	270	0.125	1200	0.124	1650	0.070	1700
101	100	0.069	230	0.170	1110	0.158	1450	0.090	1500
151	150	0.095	200	0.210	840	0.248	1180	0.11	1250
181	180	0.105	175	0.235	810	0.345	1080	0.12	1120
221	220	0.115	160	0.300	725	0.440	920	0.14	950
271	270	0.150	140	0.420	640	0.488	870	0.16	900
331	330	0.195	115	0.475	590	0.650	800	0.17	850
391	390	0.210	108	0.600	540	0.835	740	0.32	760
471	470	0.250	104	0.668	500	0.902	670	0.35	700
561	560	0.280	95	0.855	435	1.21	610	0.39	670
681	680	0.365	78	1.08	390	1.33	555	0.44	620
821	820	0.425	75	1.20	370	1.45	510	0.48	580
102	1000	0.470	68	1.38	332	2.05	468	0.53	540
122	1200	1.000	50	3.70	52	2.25	435	0.66	500
152	1500	5.9	46	4.0	47	2.50	375	0.86	420
182	1800	6.6	41	4.5	44	2.80	350	0.95	380
222	2200	7.8	37	5.2	41	3.90	300	1.07	340
272	2700	9.0	34	5.8	37	4.28	275		
332	3300	10.0	30	6.1	33	7.68	260		
392	3900	11.5	28	7.2	30	8.35	235		
472	4700	12.6	25	7.5	28	9.10	215		
562	5600	17.2	23	8.4	25	10.2	195		
682	6800	19.0	20	9.7	23	15.4	180		
822	8200	22.0	18	10.4	21	16.9	160		
103	10000	25.0	15	12.1	18	23.5	150		
123	12000	28.0	14	13.0	17				
153	15000	33.0	12	15.0	15				
183	18000	42.0	11	17.0	13				
223	22000	48.0	10	19.5	11				
273	27000	56.0	10	22.0	10				
333	33000	64.0	9	26.0	9				
393	39000	72.0	8	45.0	8				
473	47000	82.0	8	52.0	8				
563	56000			58.0	7				
683	68000			67.0	6				
823	82000			71.0	5				
104	100000			82.0	5				
124	120000			97.0	5				

Order Codes

Order Codes (TCRCS)

TCRCS	1214	-	101	M

Part Number	Size	
TCRCS	1009	11.5×10.5
	1012	11.0×13.0
	1014	11.0×15.0
	1214	13.0×15.0

Inductance	
100	10.00μH
101	100.00μH
102	1000.00μH

Tolerance	
J	±5%
K	±10%
L	±15%
M	±20%
P	±25%
N	±30%

(TCRS) Radial Choke Coil Inductors

Product Introduction

Radial choke coil shielded construction design for higher frequency.

Features :

- Magnetic shielded construction.
- Ideal for use as an inductor for high current power supplies in all types of electronic instruments.

Applications :

- Notebook, Inkjet printer, Copying machine,
- Display monitor, Cellular phone, ADSL modem,
- GaKHzg machine, Color TV, Video tape recorder,
- Microwave oven, Lighting and Car electronics.

Token TCRS series structure with magnetic shielded construction design and protect by UL or PVC Heat-shrinkable tube. The TCRS features with small size, space savings, wide inductance range, high Q value, low cost, high availability of a large induced current, high self-resonance frequency, small magnetic flux leakage and so on.

Choke coils, also known as: Choke, differential mode inductors, is used to limit the alternating current through the coil, high-frequency and low frequency choke coils.

The TCRS is idael for notebook computers, inkjet printers, photocopying machines, color TV, VCR, camera, microwave ovens, display monitors, mobile phones, broadband modems, game consoles, lighting equipment, automotive electronics products.

Token will also produce devices outside these specifications to meet specific customer requirements, please contact our sales or link to Token official website "Through Hole Inductors" for more information.

Configurations & Dimensions

Configurations & Dimensions (Unit: mm) (TCRS)

Part NO	A±1.0	B±1.0	C	D (Ref)	E (Ref)	F(Ref)
TCRS0606	6.0	6.5	4.0	0.5	15	FIG1
TCRS0807	7.8	7.5	5.0	0.7	15	FIG1
TCRS1008	10	8.5	5.0	0.7	15	FIG1(4.0±0.3)
TCRS1010	10	10.5	5.0	0.7	15	FIG1(4.0±0.3)

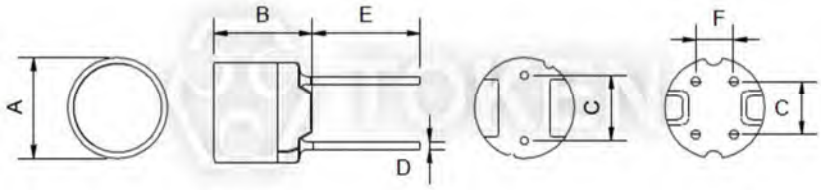

(TCRS) Configurations & Dimensions

- **Note: Design as Customer's Requested Specifications.**

TCRS

Electrical Characteristics (TCRS)

MARKING	Inductance (μH)	TCRS0606		TCRS0807		TCRS1008		TCRS1010	
		DCR(Ω) Max	IDC (A)	DCR(Ω) Max	IDC (A)	DCR(Ω) Max	IDC (A)	DCR(Ω) Max	IDC (A)
100	10					0.05	2.80	0.023	3.51
120	12					0.06	2.50	0.024	3.24
150	15					0.07	2.30	0.036	2.88
180	18					0.08	2.10	0.039	2.61
220	22	0.13	0.96	0.08	1.6	0.09	2.00	0.042	2.34
270	27	0.18	0.87	0.10	1.4	0.10	1.76	0.045	2.16
330	33	0.21	0.78	0.14	1.3	0.11	1.60	0.057	1.89
390	39	0.26	0.72	0.15	1.2	0.12	1.38	0.076	1.80
470	47	0.29	0.66	0.17	1.1	0.14	1.28	0.10	1.62
560	56	0.33	0.60	0.19	0.99	0.15	1.20	0.11	1.44
680	68	0.36	0.55	0.21	0.89	0.16	1.00	0.15	1.35
820	82	0.39	0.50	0.27	0.81	0.18	0.96	0.16	1.26
101	100	0.54	0.45	0.32	0.74	0.20	0.92	0.19	1.08
121	120	0.62	0.41	0.36	0.67	0.24	0.80	0.21	0.99
151	150	0.72	0.37	0.51	0.60	0.35	0.73	0.23	0.90
181	180	0.88	0.34	0.57	0.55	0.40	0.64	0.26	0.82
221	220	0.99	0.30	0.76	0.50	0.54	0.61	0.29	0.74
271	270	1.52	0.27	0.86	0.45	0.76	0.56	0.36	0.67
331	330	1.69	0.25	0.97	0.41	0.86	0.50	0.51	0.61
391	390	1.85	0.23	1.28	0.37	0.93	0.44	0.69	0.55
471	470	2.85	0.21	1.44	0.34	1.23	0.41	0.98	0.51
561	560	3.21	0.19	1.62	0.31	1.34	0.38	1.10	0.46
681	680	3.60	0.17	2.07	0.28	1.53	0.34	1.20	0.42
821	820	4.87	0.16	2.33	0.26	2.10	0.32	1.30	0.38
102	1000	5.56	0.14	2.72	0.23	2.30	0.28	1.50	0.35
122	1200			3.98	0.21				
152	1500			4.50	0.19				
182	1800			6.81	0.17				
222	2200			7.56	0.16				
272	2700			8.54	0.14				
332	3300			9.74	0.13				
392	3900			12.9	0.12				
472	4700			14.7	0.11				
562	5600			20.4	0.099				
682	6800			23.0	0.089				
822	8200			30.6	0.081				
103	10000			35.0	0.074				

Note:

- **Test Freq.: 1KHz / 0.25V.**
- **Operating Temp.: -40℃ ~ +85℃.**
- **Inductance drop = 10% typ. at IDC.**

Order Codes

Order Codes (TCRS)

TCRS	0606	-	220	M

Part Number	Size		Inductance		Tolerance	
TCRS	0606	6.0×6.5mm	220	22.00μH	J	5%
	0807	7.8×7.5mm	101	100.00μH	K	10%
	1008	10.0×8.5mm	102	1000.00μH	L	15%
	1010	10.0×10.5mm	103	10000.00μH	M	20%
					N	30%
					Y	Min.

(TCUU) EMI Line Filters

Product Introduction

Introduction (TCUU)

Features :

- Easily inserted into PCB.
- Small size and inexpensive type.
- Highly reliable, compact & lightweight.
- Magnetic shielded construction available.
- AC common mode choke coil which has excellent attenuation.
- Characteristics in Low Frequency Band.

Applications :

- Multi-Function Telephones.
- Common Mode Chokes for Effective AC line Noise Prevention.
- AC Adapters, Faxs Small Size Fluorescent Lights, VCRS,Color TVS.

EMI Line Filters for filtering common mode power line noise. In recent times there has been a

growing need for energy storage inductors for noise filtering in both mains line filters and DC chokes used in switched-mode power supplies. In mains line filter applications the filtering falls into two categories: common-mode noise and differential-mode noise.

The line filter arrangement consists of two sections bobbin between the mains supply and the equipment. Note that the common-mode filter is wound on a single core and the differential mode filter consists of two individual wound cores. The common-mode noise is in relation to ground and is common to both lines. Differential mode noise is the noise between the two lines. Both types of noise are usually present to varying degrees.

Token EMI line filters (TCUU) series common mode choke coils are used in a wide range of prevention of radio frequency interference (RFI) and electromagnetic interference (EMI) from power supply lines and for prevention of multifunctioning of products such as measuring equipment and system equipment. Features wide range of selection, high impedance at applicable frequency, and high self-resonant frequency.

The (TCUU) series is designed to reduce stray capacity between windings by using a single-layer coil and two sections bobbin construction on high permeability ferrite core, which offer excellent high frequency characteristics. This series provides excellent noise suppression for high frequency ranges including the FM band. This filter can also be used as a signal line with excellent withstanding voltage, since the windings are divided into two sections.

Token is equipped to design and produce custom components to meet many design and reliability demands. Custom parts are available on request. Token will also produce devices outside these specifications to meet specific customer requirements, contact us with your specific needs. For more information, please link to Token official website "Through Hole Inductors".

TCUU98V

Configurations & Dimensions (Unit: mm) (TCUU98V)

Type	A (Max.)	B (Max.)	C (Max.)	D	E	F	G
TCUU98V	11.0	16.5	16.5	3.5	Φ0.6	7.0	8.0

(TCUU98V) Image View

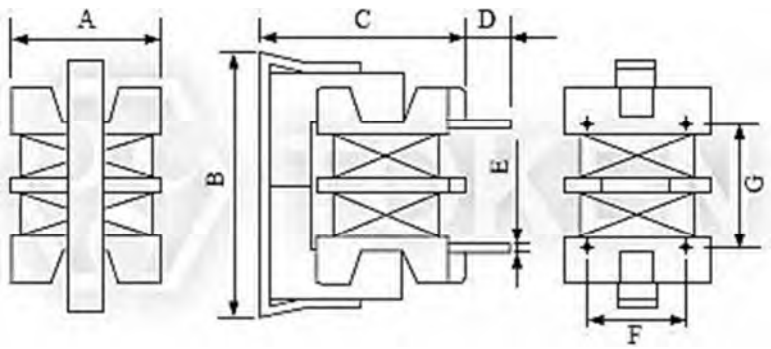

(TCUU98V) Configurations & Dimensions

- **Note: Design as Customer's Requested Specifications.**

Electrical Characteristics (TCUU98V) at 25℃

Part Number	Inductance (mH)(Min.)	Inductance Balance (μH Max.)	DCR (Ω)(Max.)	IDC (A)(Max.)
TCUU98V-471	0.47	25	0.15	1.00
TCUU98V-681	0.68	25	0.25	0.85
TCUU98V-102	1.0	50	0.35	0.70
TCUU98V-222	2.2	50	0.7	0.50
TCUU98V-392	3.9	100	1.20	0.38
TCUU98V-472	4.7	100	1.60	0.34
TCUU98V-682	6.8	150	2.50	0.25
TCUU98V-103	10.0	200	4.00	0.20

Note:
- **Test Freq.: 1.0kHz**
- **Allowable Current: D.C. Current When Temperature of Coil Increased up to 40℃. (Ta=25℃)**

TCUU98H

Configurations & Dimensions (Unit: mm) (TCUU98H)

Type	A (Max.)	B (Max.)	C (Max.)	D	E	F
TCUU98H	15.5	16.5	12.5	Φ0.6	7.0	8.0

(TCUU98H) Image View

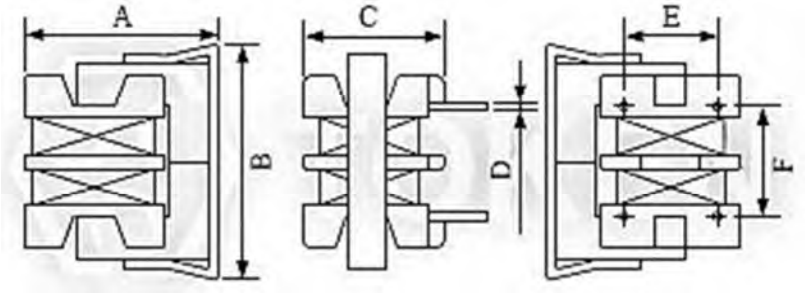

(TCUU98H) Configurations & Dimensions

- Note: Design as Customer's Requested Specifications.

Electrical Characteristics (TCUU98H) at 25℃

Part Number	Inductance (mH)(Min.)	Inductance Balance (μH)(Max.)	DCR (Ω)(Max.)	IDC (A)(Max.)
TCUU98H-471	0.47	25	0.15	1.00
TCUU98H-681	0.68	25	0.25	0.85
TCUU98H-102	1.0	50	0.35	0.70
TCUU98H-222	2.2	50	0.7	0.50
TCUU98H-392	3.9	100	1.20	0.38
TCUU98H-472	4.7	100	1.60	0.34
TCUU98H-682	6.8	150	2.50	0.25
TCUU98H-103	10.0	200	4.00	0.20

Note:
- Test Freq.: 1.0kHz
- Allowable Current: D.C. Current When Temperature of Coil Increased up to 40℃. (Ta=25℃)

TCUU10

Configurations & Dimensions (Unit: mm) (TCUU10)

Type	A (Max.)	B (Max.)	C (Max.)	D	E	F	G
TCUU10	17.0	18.5	23.0	4.0	Φ0.7	10.0	13.0

(TCUU10) Image View

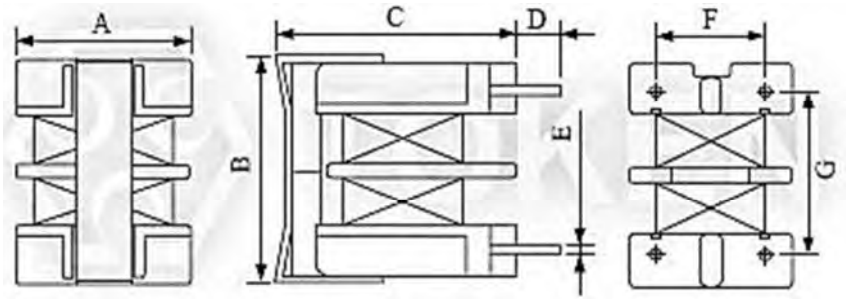

(TCUU10) Configurations & Dimensions

- **Note: Design as Customer's Requested Specifications.**

Electrical Characteristics (TCUU10) at 25℃

Part Number	Inductance (mH)(Min.)	Inductance Balance (μH)(Max.)	DCR (Ω)(Max.)	IDC (A)(Max.)
TCUU10-332	3.3	100	0.71	0.65
TCUU10-682	6.8	200	1.26	0.435
TCUU10-123	12.0	360	2.20	0.34
TCUU10-223	22.0	440	3.64	0.25
TCUU10-333	33.0	660	5.74	0.20
TCUU10-513	51.0	1000	9.12	0.15

Note:
- **Test Freq.: 1.0kHz**
- **Allowable Current: D.C. Current When Temperature of Coil Increased up to 40℃. (Ta=25℃)**

TCUU16

Configurations & Dimensions (Unit: mm) (TCUU16)

Type	A (Max.)	B (Max.)	C (Max.)	D	E	F	G
TCUU16	22.0	20.0	28.5	4.5	Φ0.7	10.0	13.0

(TCUU16) Image View

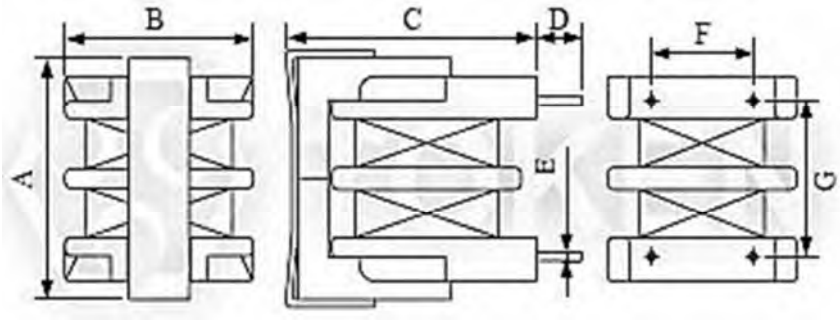

(TCUU16) Configurations & Dimensions

- **Note: Design as Customer's Requested Specifications.**

Electrical Characteristics (TCUU16) at 25℃

Part Number	Inductance (mH)(Min.)	Inductance Balance (μH)(Max.)	DCR (Ω)(Max.)	IDC (A)(Max.)
TCUU16-152	1.5	40	0.125	1.90
TCUU16-402	4.0	60	0.27	1.20
TCUU16-802	8.0	80	0.46	0.90
TCUU16-203	20.0	150	1.60	0.50
TCUU16-303	30.0	200	2.50	0.40

Note:
- **Test Freq.: 1.0kHz**
- **Allowable Current: D.C. Current When Temperature of Coil Increased up to 40℃. (Ta=25℃)**

TCUT20

Configurations & Dimensions (Unit: mm) (TCUT20)

Type	A (Max.)	B(Max.)	C(Max.)	D	E	F	G
TCUT20	17.2	22.0	22.5	4.5	Φ0.8	10.0	13.0

(TCUT20) Image View

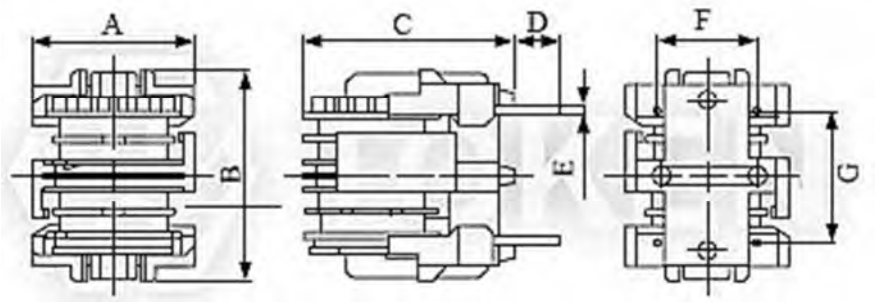

(TCUT20) Configurations & Dimensions

- **Note: Design as Customer's Requested Specifications.**

Electrical Characteristics (TCUT20) at 25℃

Part Number	Inductance (mH)(Min.)	Inductance Balance (μH)(Max.)	DCR (Ω)(Max.)	IDC (A)(Max.)
TCUT20-222	2.2	150	0.24	1.30
TCUT20-392	3.9	150	0.41	1.00
TCUT20-103	10.0	550	1.00	0.60
TCUT20-183	18.0	600	1.63	0.50
TCUT20-223	22.0	800	2.04	0.40
TCUT20-333	33.0	800	3.42	0.30

Note:
- **Test Freq.: 1.0kHz**
- **Allowable Current: D.C. Current When Temperature of Coil Increased up to 40℃. (Ta=25℃)**

TCET24B

Configurations & Dimensions (Unit: mm) (TCET24B)

Type	A (Max.)	B(Max.)	C(Max.)	D	E	F	G
TCET24B	18.5	25.5	31.0	4.0	Φ0.8	10.0	13.0

(TCET24B) Image View

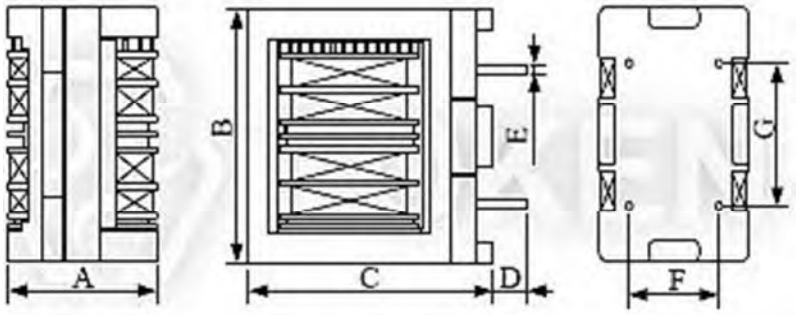

(TCET24B) Configurations & Dimensions

- Note: Design as Customer's Requested Specifications.

Electrical Characteristics (TCET24B) at 25℃

Part Number	Inductance (mH)(Min.)	Inductance Balance (μH)(Max.)	DCR (Ω)(Max.)	IDC (A)(Max.)
TCET24B-252	2.5	100	0.13	2.00
TCET24B-352	3.5	150	0.18	1.70
TCET24B-452	4.5	200	0.21	1.50
TCET24B-103	10.0	300	0.47	1.00
TCET24B-153	15.0	400	0.73	0.80
TCET24B-203	20.0	600	0.87	0.70
TCET24B-353	35.0	800	1.58	0.60

Note:
- Test Freq.: 1.0kHz
- Allowable Current: D.C. Current When Temperature of Coil Increased up to 40℃. (Ta=25℃)

TCET24H

Configurations & Dimensions (Unit: mm) (TCET24H)

Type	A (Max.)	B(Max.)	C(Max.)	D	E	F	G
TCET24H	18.5	25.5	31.0	4.0	Φ0.8	10.0	13.0

(TCET24H) Image View

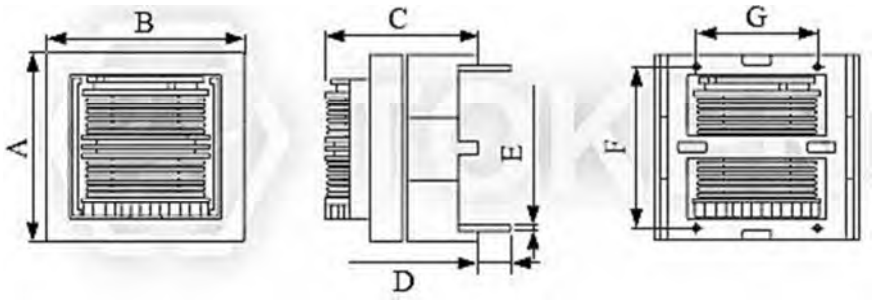

(TCET24H) Configurations & Dimensions

- Note: Design as Customer's Requested Specifications.

Electrical Characteristics (TCET24H) at 25℃

Part Number	Inductance (mH)(Min.)	Inductance Balance (μH)(Max.)	DCR (Ω)(Max.)	IDC (A)(Max.)
TCET24H-252	2.5	100	0.13	2.00
TCET24H-352	3.5	150	0.18	1.70
TCET24H-452	4.5	200	0.21	1.50
TCET24H-103	10.0	300	0.47	1.00
TCET24H-153	15.0	400	0.73	0.80
TCET24H-203	20.0	600	0.87	0.70
TCET24H-353	35.0	800	1.58	0.60

Note:
- Test Freq.: 1.0kHz
- Allowable Current: D.C. Current When Temperature of Coil Increased up to 40℃. (Ta=25℃)

TCET28B

Configurations & Dimensions (Unit: mm) (TCET28B)

Type	A (Max.)	B(Max.)	C(Max.)	D	E	F	G
TCET28B	22.0	31.0	35.5	4.0	Φ0.8	10.0	13.0

(TCET28B) Image View

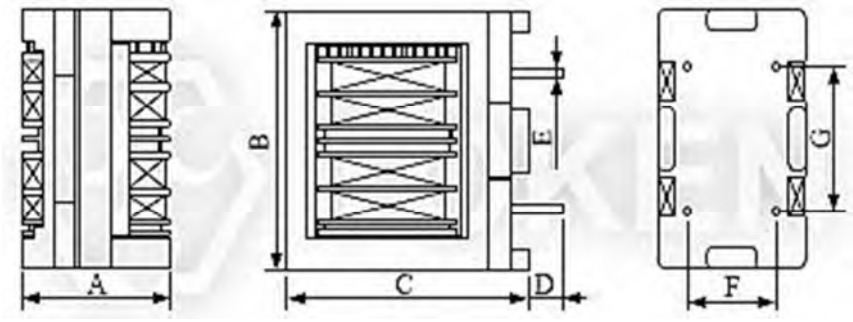

(TCET28B) Configurations & Dimensions

- Note: Design as Customer's Requested Specifications.

Electrical Characteristics (TCET28B) at 25℃

Part Number	Inductance (mH)(Min.)	Inductance Balance (μH)(Max.)	DCR (Ω)(Max.)	IDC (A)(Max.)
TCET28B-182	1.8	100	0.072	2.60
TCET28B-682	6.8	200	0.23	1.60
TCET28B-123	12.0	400	0.38	1.20
TCET28B-223	22.0	500	0.65	1.00
TCET28B-393	39.0	700	1.43	0.70
TCET28B-683	68.0	850	1.82	0.60

Note:
- Test Freq.: 1.0kHz
- Allowable Current: D.C. Current When Temperature of Coil Increased up to 40℃. (Ta=25℃)

TCET28H

Configurations & Dimensions (Unit: mm) (TCET28H)

Type	A (Max.)	B(Max.)	C(Max.)	D	E	F	G
TCET28H	30.0	30.0	23.5	3.5 ± 0.5	Φ0.8 ±0.1	24.0 ± 0.5	20.0 ± 0.5

(TCET28H) Image View

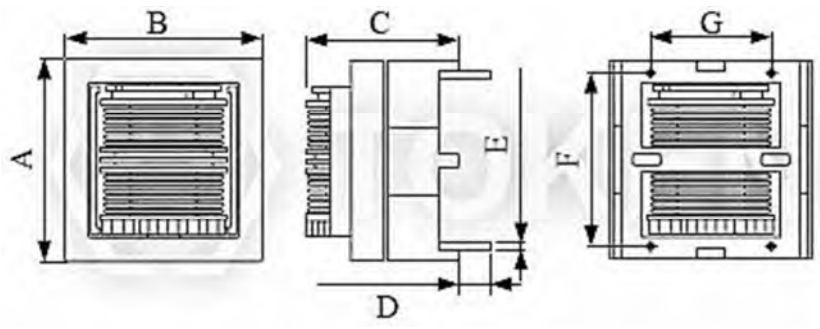

(TCET28H) Configurations & Dimensions

- Note: Design as Customer's Requested Specifications.

Electrical Characteristics (TCET28H) at 25℃

Part Number	Inductance (mH)(Min.)	Inductance Balance (μH)(Max.)	DCR (Ω)(Max.)	IDC (A)(Max.)
TCET28H-182	1.8	100	0.072	2.60
TCET28H-682	6.8	200	0.23	1.60
TCET28H-123	12.0	400	0.38	1.20
TCET28H-223	22.0	500	0.65	1.00
TCET28H-393	39.0	700	1.43	0.70
TCET28H-683	68.0	850	1.82	0.60

Note:
- Test Freq.: 1.0kHz
- Allowable Current: D.C. Current When Temperature of Coil Increased up to 40℃. (Ta=25℃)

Order Codes

Order Codes (TCUU98V, TCUU98H, TCUU10, TCUU16)

TCUU98V	471			P
Part Number	Inductance		Winding	Package
TCUU98V Vertical Type	471	0.47mH	None Standard Winding	P Bulk
TCUU98H Horizontal Type	681	0.68mH	D Sectional Winding	
TCUU10	102	1.0mH		
TCUU16	222	2.2mH		

(TCUT20, TCET24B, TCET24H, TCET28B, TCET28H) Order Codes

TCUT20	222		P
Part Number	Inductance		Package
TCUT20	222	2.2mH	P Bulk
TCET24B	392	3.9mH	
TCET24H	103	10.0mH	
TCET28B	183	20.0mH	
TCET28H			

(TCDA)
High Current Power Inductors

Product Introduction

Technology of Diagonal Through Hole High Current Power Inductors (TCDA) Design.

Features :

- Low DCR.
- High Frequency (up to 1MHz).
- Low Profile: 7.5mm ~ 10.0mm
- For Large Current Use: 12 ~ 45 amp.
- Diagonal Through Hole Power Inductor.

Applications :

- Graphic Card/ VGA Module.
- Inductor for general purpose use.
- Laptop Computer / Notebook Computer.
- DC/DC converter or VRM applications.
- Thin type on-board power supply module for exchanger.

Token's TCDA Large Current Series power inductors feature with high current, low DC resistance, high frequency, easy heat dissipation, and high reliability advantages.

Token utilizes the latest technology of diagonal through hole power inductor design enabling the most cost-effective propose in manufacturing TCDA Products.

Token will also produce devices outside these specifications to meet customer requirements, with comprehensive application engineering and design support available for customers worldwide.

The TCDA series is lead-free and RoHS compliant. Detailed specifications, both mechanical and electrical. Please contact our sales or link to Token official website "Through Hole Inductors" for more information.

Configurations & Dimensions

Configurations & Dimensions (Unit: mm) (TCDA0707/0808/1012/1010A/1312)

TCDA0707		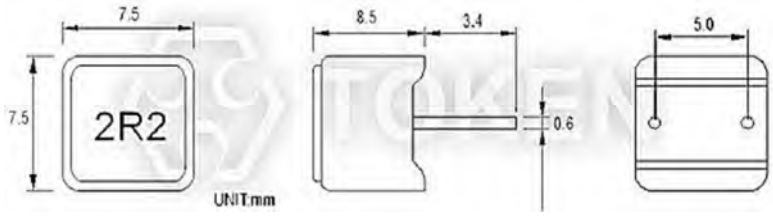
TCDA0808		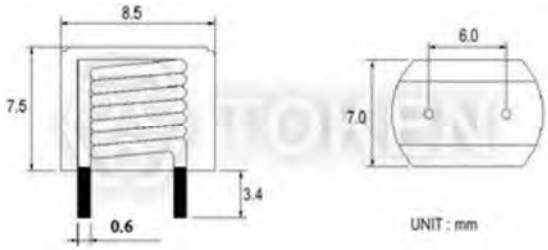
TCDA1210		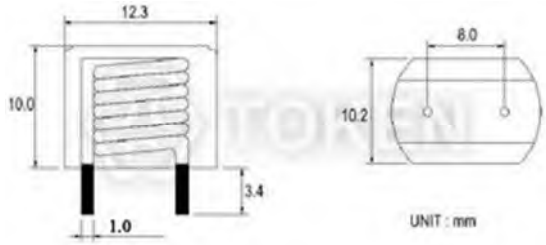
TCDA1010A		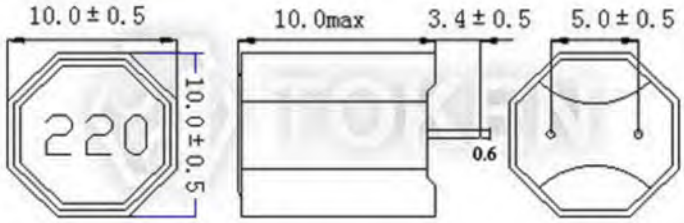
TCDA1312		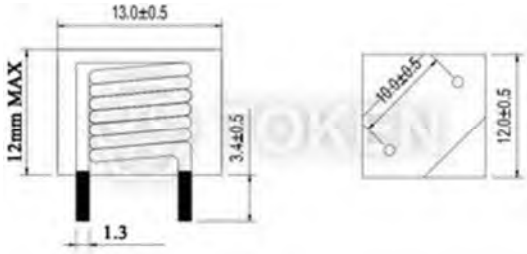

TCDA0707

Electrical Characteristics (TCDA0707)

PART NO	L (μH)	DCR Max. (mΩ)	IDC Max. (A)	TEST FREQ. (Hz)
TCDA0707-R56MB	0.56	2.50	32	100k/0.1v
TCDA0707-1R0MB	1.00	5.6	21	100k/0.1v
TCDA0707-1R5MB	1.5	7.5	18	100k/0.1v
TCDA0707-2R2MB	2.2	10.00	16	100k/0.1v
TCDA0707-2R8MB	2.8	11.8	15	100k/0.1v
TCDA0707-3R3MB	3.3	13.6	14	100k/0.1v
TCDA0707-4R7MB	4.7	17.00	12	100k/0.1v

Note:

- **Ims: The vaiue of current indicates that the temperature of the coil is increase 40℃ (trpcial) 。**
- **Isat: The valve of current indicates that inductance drops 20% (trpcial)from its initial value without DC current.**
- **Test condition: Ta = 25℃ 。**
- **Test condition: 100 KHZ 0.1V 。**
- **In Bulk packing.**
- **Special inquiries besides the above common used types can be met on your require ment.**
- **TEMPERATURE RATING: Operating -55℃ to ~ 125℃ 。**

TCDA0808

Electrical Characteristics (TCDA0808)

PART NO	L (μH)	DCR Max. (mΩ)	IDC Max. (A)	TEST FREQ. (Hz)
TCDA0808-R56MB	0.56	2.50	32	100k/0.1v
TCDA0808-1R0MB	1.00	5.6	21	100k/0.1v
TCDA0808-1R5MB	1.5	7.5	18	100k/0.1v
TCDA0808-2R2MB	2.2	10.00	16	100k/0.1v
TCDA0808-2R8MB	2.8	11.8	15	100k/0.1v
TCDA0808-3R3MB	3.3	13.6	14	100k/0.1v
TCDA0808-4R7MB	4.7	17.00	12	100k/0.1v

Note:

- **Ims: The vaiue of current indicates that the temperature of the coil is increase 40℃ (trpcial) 。**
- **Isat: The valve of current indicates that inductance drops 20% (trpcial)from its initial value without DC current.**
- **Test condition: Ta = 25℃ 。**
- **Test condition: 100 KHZ 0.1V 。**
- **In Bulk packing.**
- **Special inquiries besides the above common used types can be met on your require ment.**
- **TEMPERATURE RATING: Operating -55℃ to ~ 125℃ 。**

TCDA1010A

Electrical Characteristics (TCDA1010A)

PART NO	L (μH)	DCR Max. (mΩ)	IDC Max. (A)	TEST FREQ. (Hz)
TCDA1010A-100MB	10	16.00	Isat 9.0A / Irms 5.0A	100k/0.1v
TCDA1010A-150MB	15	28.00	Isat 7.0A / Irms 4.5A	100k/0.1v
TCDA1010A-220MB	22	32.00	Isat 6.0A / Irms 4.0A	100k/0.1v
TCDA1010A-330MB	33	52.00	Isat 5.0A / Irms 3.5A	100k/0.1v
TCDA1010A-470MB	47	80.00	Isat 3.0A / Irms 2.0A	100k/0.1v

Note:
- **Ims: The vaiue of current indicates that the temperature of the coil is increase 40℃ (trpcial) 。**
- **Isat: The valve of current indicates that inductance drops 20% (trpcial)from its initial value without DC current.**
- **Test condition: Ta = 25℃ 。**
- **Test condition: 100 KHZ 0.1V 。**
- **In Bulk packing.**
- **Special inquiries besides the above common used types can be met on your require ment.**
- **TEMPERATURE RATING: Operating -55℃ to ~ 125℃ 。**

TCDA1210

Electrical Characteristics (TCDA1210)

PART NO	L (μH)	DCR Max. (mΩ)	IDC Max. (A)	TEST FREQ. (Hz)
TCDA1210-R22MB	0.22	0.60	56	100k/0.1v
TCDA1210-R33MB	0.33	0.80	48	100k/0.1v
TCDA1210-R39M-B	0.39	0.80	48	100k/0.1v
TCDA1210-R47M-B	0.47	1.00	40	100k/0.1v
TCDA1210-R56M-B	0.56	1.00	40	100k/0.1v
TCDA1210-R68M-B	0.68	1.00	40	100k/0.1v
TCDA1210-R80M-B	0.80	1.25	36	100k/0.1v
TCDA1210-1R0M-B	1.00	2.00	32	100k/0.1v
TCDA1210-1R5M-B	1.50	3.50	30	100k/0.1v
TCDA1210-2R2M-B	2.20	5.00	24	100k/0.1v
TCDA1210-2R8M-B	2.80	6.40	20	100k/0.1v
TCDA1210-3R3M-B	3.30	7.70	16	100k/0.1v
TCDA1210-4R7M-B	4.70	10.00	15	100k/0.1v

Note:
- **Ims: The vaiue of current indicates that the temperature of the coil is increase 40℃ (trpcial) 。**
- **Isat: The valve of current indicates that inductance drops 20% (trpcial)from its initial value without DC current.**
- **Test condition: Ta = 25℃ 。**
- **Test condition: 100 KHZ 0.1V 。**
- **In Bulk packing.**
- **Special inquiries besides the above common used types can be met on your require ment.**
- **TEMPERATURE RATING: Operating -55℃ to ~ 125℃ 。**

TCDA1312

Electrical Characteristics (TCDA1312)

PART NO	L (μH)	DCR Max. (mΩ)	IDC Max. (A)	TEST FREQ. (Hz)
TCDA1312-R33MB	0.33	0.6	40	100k/0.1v
TCDA1312-R39MB	0.39	0.65	39	100k/0.1v
TCDA1312-R47MB	0.47	0.68	38	100k/0.1v
TCDA1312-R56MB	0.56	0.68	38	100k/0.1v
TCDA1312-R68MB	0.68	0.85	35	100k/0.1v
TCDA1312-R80MB	0.80	0.90	33	100k/0.1v
TCDA1312-1R0MB	1.00	1.25	28	100k/0.1v
TCDA1312-1R5MB	1.5	1.65	25	100k/0.1v

Note:

- **Ims: The vaiue of current indicates that the temperature of the coil is increase 40℃ (trpcial) 。**
- **Isat: The valve of current indicates that inductance drops 20% (trpcial)from its initial value without DC current.**
- **Test condition: Ta = 25℃ 。**
- **Test condition: 100 KHZ 0.1V 。**
- **In Bulk packing.**
- **Special inquiries besides the above common used types can be met on your require ment.**
- **TEMPERATURE RATING: Operating -55℃ to ~ 125℃ 。**

Order Codes

Order Codes (TCDA)

TCDA	1312	-	R22	M
Part Number	Size		Inductance	Tolerance
TCDA	0707 7.5×7.5mm		R22 0.22μH	J ±5%
	0808 8.5×7.0mm		1R0 1.00μH	K ±10%
	1210 12.3×10.2mm			L ±15%
	1010A 10.0×10.0mm			M ±20%
	1312 13.0×12.0mm			P ±25%
				N ±30%

(TCDU)
Nickel Core Integrated Inductor

Product Introduction

Technology of Diagonal Through Hole Nickel Core Integrated Inductor Design.

Features :

- Ultra low cost.
- Shielded construotion.
- High current rating up to DC 33 Amp.
- High frequency range up to 1.0MHz.
- Very low DC resistance.
- All lead-free.(RoHS).

Applications :

- Motherboards for laptop and desdtop computers.
- DC/DC converter in distributed power systems or VRM Applications. Inductor for general purpose use.

An integrated circuit structure is provided with (TCDU) inductor formed of a high magnetic susceptibility nickel metal core coil. The Nickel Core Integrated Inductor (TCDU) measure high current rating up to DC 33 Amp., frequency high up to 1.0MHz with low DC resistance. Three compact sizes are available, 8.5mm x 8.5mm, 10.2mm x 10.2mm, and 11.5mm x 11.5mm. Making them ideally for today's DC/DC converter in distributed power systems or VRM, and motherboards for laptop and desdtop computers applications.

The (TCDU) inductors are RoHS compliant and meet standard requirements. Custom parts are available on request. Token will also produce devices outside these specifications to meet specific customer requirements, Please contact our sales or link to Token official website "Through Hole Inductors" for more information.

Configurations & Dimensions

Configurations & Dimensions (Unit: mm) (TCDU0806/0809/1009/1103)

TCDU0806		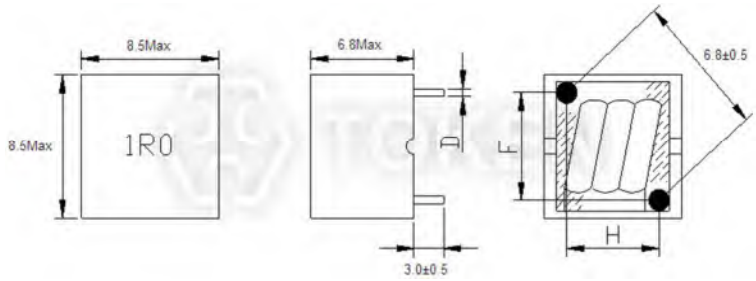
TCDU0809		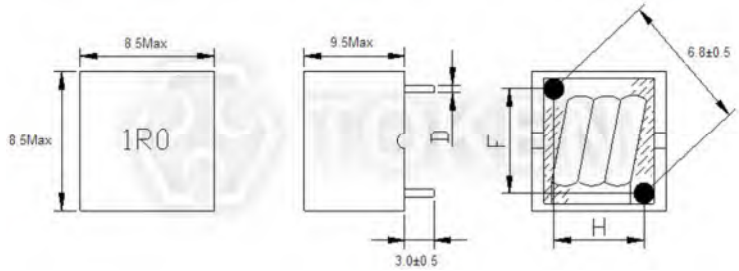
TCDU1009		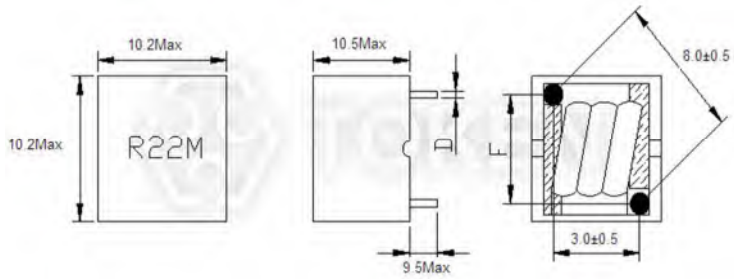
TCDU1109		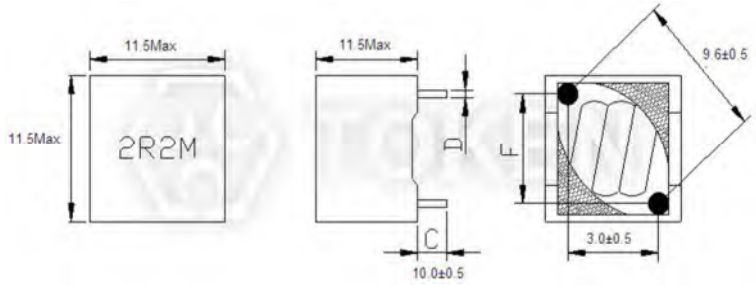

TCDU0806

Electrical Characteristics (TCDU0806)

Part No	L (μH)	DCR (mΩ)		Isat (A)	Irms (A)
	±20%	TYP	MAX	TYP	TYP
TCDU0806-1R0M	1.00	2.50	2.70	12.0	12.0

Note:
- Inductance tested at 100KHz , 0.1V.
- Inductance drop = 10% typ. at rated isat.
- Δ T = 40 ℃ rise typ. at irms.
- Operating temperature range -40 ℃ to +125 ℃.
- Electrical specifitions at +25 ℃.

TCDU0809

Electrical Characteristics (TCDU0809)

Part No	L (μH)	DCR (mΩ)		Isat (A)	Irms (A)
	±20%	TYP	MAX	TYP	TYP
TCDU0806-2R2M	2.20	4.60	5.00	13.0	10.0

Note:
- Inductance tested at 100KHz , 0.1V.
- Inductance drop = 10% typ. at rated isat.
- Δ T = 40 ℃ rise typ. at irms.
- Operating temperature range -40 ℃ to +125 ℃.
- Electrical specifitions at +25 ℃.

TCDU1009

Electrical Characteristics (TCDU1009)

Part No	L (μH)	DCR (mΩ)		Isat (A)	Irms (A)
	±20%	TYP	MAX	TYP	TYP
TCDU1009-R22M	0.22	0.53	0.65	50.0	33.0
TCDU1009-R36M	0.36	0.70	0.90	50.0	33.0
TCDU1009-R47M	0.47	0.70	0.90	30.0	26.0
TCDU1009-R50M	0.50	0.70	0.90	30.0	26.0
TCDU1009-R56M	0.56	0.70	0.90	30.0	26.0
TCDU1009-R80M	0.80	1.28	1.56	30.0	20.0
TCDU1009-1R0M	1.00	1.28	1.56	30.0	20.0
TCDU1009-2R2M	2.20	4.00	3.10	18.0	13.0

Note:
- Inductance tested at 100KHz , 0.1V.
- Inductance drop = 10% typ. at rated isat.
- Δ T = 40 ℃ rise typ. at irms.
- Operating temperature range -40 ℃ to +125 ℃.
- Electrical specifitions at +25 ℃.

TCDU1109

Electrical Characteristics (TCDU1109)

Part No	L (μH)	DCR (mΩ)		Isat (A)	Irms (A)
	±20%	TYP	MAX	TYP	TYP
TCDU1109-R22M	0.22	0.50	0.75	40.0	30.0
TCDU1109-R56M	0.56	1.00	1.30	40.0	28.0
TCDU1109-1R0M	1.00	1.20	1.50	28.0	24.0
TCDU1109-1R2M	1.20	1.20	1.50	26.0	22.0
TCDU1109-2R2M	2.00	2.30	3.00	25.0	18.0

Note:

- **Inductance tested at 100KHz , 0.1V.**
- **Inductance drop = 10% typ. at rated isat.**
- **ΔT = 40 ℃ rise typ. at irms.**
- **Operating temperature range -40 ℃ to +125 ℃.**
- **Electrical specifitions at +25 ℃.**

Order Codes

Order Codes (TCDU)

TCDU	1109	-	R22	M
Part Number	Size		Inductance	Tolerance
TCDU	0806 8.5×8.5mm		R22 0.22μH	J ±5%
	0809 8.5×8.5mm		1R0 1.00μH	K ±10%
	1009 10.2×10.2mm			L ±15%
	1109 11.5×11.5mm			M ±20%
				P ±25%
				N ±30%

(TCDY)
High Current Integrated Inductor

Product Introduction

Technology of Diagonal Through Hole High Current Power Inductors Design.

Features :

- Ultra low cost.
- Shielded construotion.
- High current rating up to DC 40 Amp.
- High frequency range up to 1.0MHz.
- Very low DC resistance.
- All lead-free.(RoHS).

Applications :

- Motherboards for laptop and desdtop computers.
- DC/DC converter in distributed power systems or VRM Applications. Inductor for general purpose use.

Today's electronics have grown to be more and more power hungry and therefore are operating at greater switching frequencies, depriving for speed and shrinking in dimensions as nothing you've seen prior. Inductors really are a fundamental aspect in the current regulator topology, and just about any circuit that regulates power in automobiles, industrial and electronic devices, and DC-DC converters requires an inductor. Conventional inductor technologies have been falling behind in meeting our prime performance need for these advanced electronics. Consequently, Token is promoting several inductor models with rated DC current as much as 40 A to satisfy the difficulties from the market.

The Nickel Core Integrated Inductor (TCDY) measure high current rating up to DC 40 Amp., frequency high up to 1.0MHz with low DC resistance. Three compact sizes are available, 8.2mm x 8.2mm, 10.2mm x 10.2mm, and 12.5mm x 12.5mm. Making them ideally for today's DC/DC converter in distributed power systems or VRM, and motherboards for laptop and desdtop computers applications.

The (TCDY) inductors are RoHS compliant and meet standard requirements. Custom parts are available on request. Token will also produce devices outside these specifications to meet specific customer requirements. Please contact our sales or link to Token official website "Through Hole Inductors" for more information.

Configurations & Dimensions

Configurations & Dimensions (Unit: mm) (TCDY0806/1108/1310)

TCDY0806		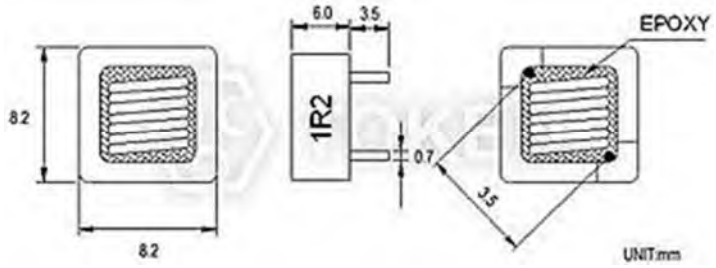
TCDY1108		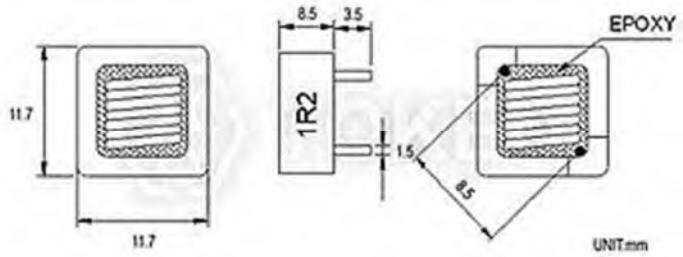
TCDY1310		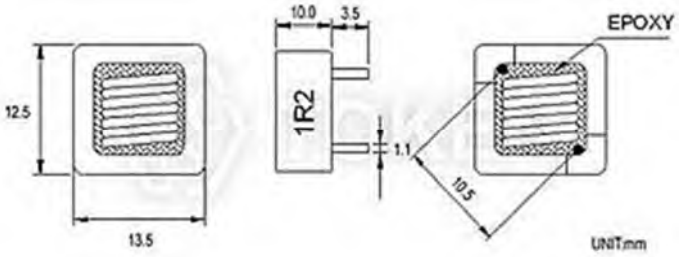

TCDY0806

Electrical Characteristics (TCDY0806)

Part No	L (μH)	DCR Max. (mΩ)	IDC Max. (A)	Test Freq. (Hz)
TCDY0806-R47M	0.47	1.9	22.0	1.0/100k
TCDY0806-R60M	0.60	1.9	21.0	1.0/100k
TCDY0806-R80M	0.80	2.9	17.0	1.0/100k
TCDY0806-1R0M	1.00	4.3	14.0	1.0/100k

Note:
- **Inductance tested at 100KHz , 0.1V.**
- **Inductance drop = 10% typ. at rated isat.**
- **Δ T = 40 ℃ rise typ. at irms.**
- **Operating temperature range -40 ℃ to +125 ℃.**
- **Electrical specifitions at +25 ℃.**

TCDY1108

Electrical Characteristics (TCDY1108)

Part No	L (μH)	DCR Max. (mΩ)	IDC Max. (A)	Test Freq. (Hz)
TCDY1108-R47MB	0.47	0.8	38.0	100k/0.1v
TCDY1108-R60MB	0.60	0.8	38.0	100k/0.1v
TCDY1108-R80MB	0.80	1.3	31.0	100k/0.1v
TCDY1108-1R0MB	1.00	1.3	31.0	100k/0.1v
TCDY1108-1R5MB	1.50	1.8	26.0	100k/0.1v
TCDY1108-2R0MB	2.00	3.3	20.0	100k/0.1v
TCDY1108-3R3MB	3.30	6.3	14.0	100k/0.1v

Note:
- **Inductance tested at 100KHz , 0.1V.**
- **Inductance drop = 10% typ. at rated isat.**
- **Δ T = 40 ℃ rise typ. at irms.**
- **Operating temperature range -40 ℃ to +125 ℃.**
- **Electrical specifitions at +25 ℃.**

TCDY1310

Electrical Characteristics (TCDY1310)

Part No	L (μH)	DCR Max. (mΩ)	IDC Max. (A)	Test Freq. (Hz)
TCDY1310-R47MB	0.47	0.75	40	100k/0.1v
TCDY1310-R60MB	0.60	0.75	40	100k/0.1v
TCDY1310-R80MB	0.80	0.75	39	100k/0.1v
TCDY1310-1R0MB	1.0	1.15	32	100k/0.1v
TCDY1310-1R5MB	1.5	1.85	26	100k/0.1v
TCDY1310-2R0MB	2.0	3.0	21	100k/0.1v
TCDY1310-2R4MB	2.4	3.0	20	100k/0.1v
TCDY1310-3R3MB	3.3	4.3	17	100k/0.1v

Note:

- **Inductance tested at 100KHz , 0.1V.**
- **Inductance drop = 10% typ. at rated isat.**
- **Δ T = 40 ℃ rise typ. at irms.**
- **Operating temperature range -40 ℃ to +125 ℃.**
- **Electrical specifitions at +25 ℃.**

Order Codes

Order Codes (TCDY)

TCDY	1310	-	R22	M
Part Number	Size		Inductance	Tolerance
TCDY	0806 8.2×8.2mm		R22 0.22μH	J ±5%
	1108 11.7×11.7mm		1R0 1.00μH	K ±10%
	1310 12.5×13.5mm			L ±15%
				M ±20%
				P ±25%
				N ±30%

(TCTC)
High Current Toroidal Inductors

Product Introduction

Low Loss Powdered Iron Cores, Low EMI, High Current Toroidal Inductors.

Features :

- Notebook, Inkjet Printer,Copying Machine,
- Copying Machine, Display Monitor, ADSL Modem,
- Color TV, Video Camera, Air Conditioner, Refrigerator,
- Laundry Machine, Microwave Oven and Car Electronics, etc..

Applications :

- Low EMI.
- Low Cost.
- High Current.

Toroidal inductors and transformers are electronic components with the high performers among inductors, typically consisting of a circular ring-shaped magnetic core of iron powder, ferrite, or other material around which wire is coiled to make an inductor. Their windings cool better because of the proportionally larger surface area. Toroidal coils with a round core cross section are better performers than a rectangular cross section.

Token's (TCTC) high current Toroidal Series manufactured by Low loss powdered iron cores offer the smallest size by volume and weight, and lower electromagnetic interference (EMI). Token toroidal can have higher Q factors and higher inductance than similarly constructed solenoid coils. This is due largely to the smaller number of turns required when the core provides a closed magnetic path. The magnetic flux in a toroid is largely confined to the core, preventing its energy from being absorbed by nearby objects, making toroidal cores essentially self-shielding. The (TCTC) series is suitable for a broad range of applications, such as high-frequency coils and transformers.

Full line products meet RoHS compliant. Token will also produce devices outside these specifications to meet specific customer requirements, please contact our sales or link to Token official website "Through Hole Inductors" for more information.

Configurations & Dimensions

Configurations & Dimensions (Unit: mm) (TCTC)

Type: HA		A Max	B Max	C	D
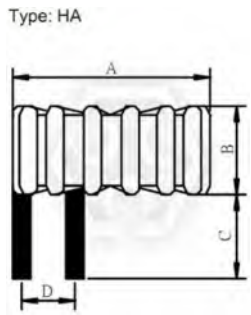	TCTC5026 -HA	15.5	8.0	6±1	5±1
	TCTC5026B -HA	15.5	9.5	6±1	5±1
	TCTC5052 -HA	15.5	8.0	6±1	5±1
	TCTC5052B -HA	15.5	9.5	6±1	5±1
	TCTC5018B -HA	15.5	9.5	6±1	5±1
	TCTC5018 -HA	15.5	8.0	6±1	5±1
	TCTC6052 -HA	20.0	10.0	6±1	5±1
	TCTC6018 -HA	20.0	10.0	6±1	5±1
Type: HB		**A Max**	**B Max**	**C**	**D**
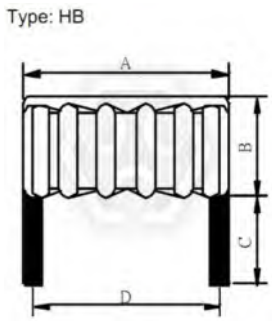	TCTC5026 -HB	18.0	10.0	6±1	15±1
	TCTC5026B -HB	18.0	11.5	6±1	15±1
	TCTC5052 -HB	18.0	10.0	6±1	15±1
	TCTC5052B -HB	18.0	11.5	6±1	15±1
	TCTC5018B -HB	18.0	11.5	6±1	15±1
	TCTC5018 -HB	18.0	10.0	6±1	15±1
	TCTC6052 -HB	22.0Max.	12.0Max.	6±1	17±1
	TCTC6018 -HB	22.0Max.	12.0Max.	6±1	17±1
Type: HC		**A Max**	**B Max**	**C**	**D**
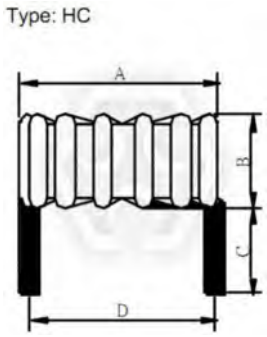	TCTC5026 -HC	15.5	8.0	6±1	14±1
	TCTC5026B -HC	15.5	9.5	6±1	14±1
	TCTC5052 -HC	15.5	8.0	6±1	14±1
	TCTC5052B -HC	15.5	9.5	6±1	14±1
	TCTC5018B -HC	15.5	9.5	6±1	141
	TCTC6052 -HC	20.0	10.0	6±1	16±1
	TCTC6018 -HC	20.0	10.0	6±1	16±1
Type: V		**A Max**	**B Max**	**C**	**D**
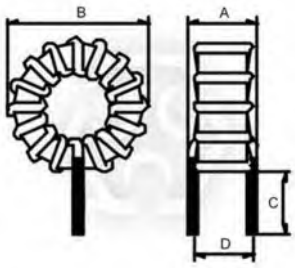	TCTC5026 -V	9.0	18.0	6±1	7.0±1
	TCTC5026B -V	10.0	18.0	6±1	8.5±1
	TCTC5052 -V	9.0	18.0	6±1	7±1
	TCTC5052B -V	10.0	18.0	6±1	8.5±1
	TCTC5018B -V	10.0	18.0	6±1	8.5±1
	TCTC6052 -V	11.0	21.0	6±1	9.5REF
	TCTC6018 -V	11.0	21.0	6±1	9.5REF

Configurations & Dimensions (Unit: mm) (TCTC)

In addition, a variety of common mode magnetic coil inductors can be supplied according to customer requirements			
			

- **Note: Design as Customer's Requested Specifications.**

TCTC

Electrical Characteristics (TCTC)

Indctance (µH)	5026		5026B		5052		5052B		5018		5018B		6052		6018	
	DCR	IDC	DCR	IDC	DCR	IDC	DCR	IDC	DCR	IDC	DCR	IDC	DCR	IDC	DCR	IDC
1.0(1R0M)	6.0	15/0.8	5.0	15/0.8	6.0	15/0.8	5.0	15/0.8	6.0	15/0.8	5.0	15/0.8	4.0	20/0.8	4.0	20/0.8
1.2(1R2M)	6.0	15/1.0	5.0	15/1.0	6.0	15/1.0	5.0	15/1.0	6.0	15/1.0	5.0	15/1.0	4.0	20/1.0	4.0	20/1.0
1.5(1R5M)	6.0	12/1.2	6.0	15/1.2	6.0	12/1.2	6.0	15/1.2	6.0	15/1.2	6.0	15/1.2	4.0	20/1.2	4.0	20/1.2
1.8(1R8M)	7.0	12/1.5	6.0	12/1.5	7.0	12/1.5	6.0	12/1.5	7.0	12/1.5	6.0	12/1.5	4.0	15/1.5	4.0	15/1.5
2.0(2R0M)	7.0	11/1.6	6.0	12/1.6	7.0	11/1.6	6.0	12/1.6	7.0	12/1.6	6.0	12/1.6	4.0	15/1.6	4.0	15/1.6
2.2(2R2M)	7.0	11/1.7	7.0	12/1.7	7.0	11/1.7	7.0	12/1.7	7.0	12/1.7	7.0	12/1.7	4.0	15/1.7	4.0	15/1.7
2.5(2R5M)	8.0	10/2.0	7.0	10/2.0	8.0	10/2.0	7.0	10/2.0	8.0	10/2.0	7.0	10/2.0	5.0	15/2.0	5.0	15/2.0
2.7(2R7M)	8.0	10/2.2	7.0	10/2.2	8.0	10/2.2	7.0	10/2.2	8.0	10/2.2	7.0	10/2.2	5.0	12/2.2	5.0	12/2.2
3.0(3R0M)	8.0	9/2.4	7.0	10/2.4	8.0	9/2.4	7.0	10/2.4	8.0	10/2.4	7.0	10/2.4	5.0	12/2.4	5.0	12/2.4
3.3(3R0M)	8.0	9/2.7	7.0	9/2.7	8.0	9/2.7	7.0	9/2.7	8.0	9/2.7	7.0	9/2.7	5.0	12/2.7	5.0	12/2.7
3.5(3R5M)	9.0	8/2.8	8.0	9/2.8	9.0	8/2.8	8.0	9/2.8	9.0	9/2.8	8.0	9/2.8	5.0	12/2.8	5.0	12/2.8
3.9(3R9M)	9.0	8/3.0	8.0	9/3.3	9.0	8/3.0	8.0	9/3.3	9.0	9/3.3	8.0	9/3.3	5.0	10/3.0	5.0	10/3.0
4.0(4R0M)	9.0	7/3.2	8.0	8/3.2	9.0	7/3.2	8.0	8/3.2	9.0	8/3.2	8.0	8/3.2	5.0	10/3.2	5.0	10/3.2
4.5(4R5M)	9.0	7/3.6	9.0	8/3.6	9.0	7/3.6	9.0	8/3.6	9.0	8/3.6	9.0	8/3.6	5.0	10/3.6	5.0	10/3.6
4.7(4R7M)	10.0	6/3.8	9.0	8/3.8	10.0	6/3.8	9.0	8/3.8	10.0	8/3.8	9.0	8/3.8	6.0	9/3.8	6.0	9/3.8
5.0(5R0M)	10.0	6/4.0	9.0	7/4.0	10.0	6/4.0	9.0	7/4.0	10.0	7/4.0	9.0	7/4.0	6.0	9/4.0	6.0	9/4.0
6.0(6R0M)	10.0	5/4.8	9.0	7/4.8	10.0	5/4.8	9.0	7/4.8	10.0	7/4.8	9.0	7/4.8	6.0	8/4.8	6.0	8/4.8
6.5(6R5M)	11.0	5/5.0	9.0	6/5.2	11.0	5/5.0	9.0	6/5.2	11.0	6/5.2	9.0	6/5.2	6.0	8/5.2	6.0	8/5.2
7.0(7R0M)	11.0	4/5.6	10.0	6/5.6	11.0	4/5.6	10.0	6/5.6	11.0	6/5.6	10.0	6/5.6	6.0	7/5.6	6.0	7/5.6
7.5(7R5M)	11.0	4/6.1	10.0	5/6.1	11.0	4/6.1	10.0	5/6.1	11.0	5/6.1	10.0	5/6.1	6.0	7/6.1	6.0	7/6.1
8.0(8R0M)	12.0	3/6.4	10.0	5/6.4	12.0	3/6.4	10.0	5/6.4	12.0	5/6.4	10.0	5/6.4	7.0	7/6.4	7.0	7/6.4
8.5(8R5M)	12.0	3/6.8	11.0	4/6.8	12.0	3/6.8	11.0	4/6.8	12.0	4/6.8	11.0	4/6.8	7.0	6/6.8	7.0	6/6.8
9.0(9R0M)	12.0	3/7.2	11.0	4/7.2	12.0	3/7.2	11.0	4/7.2	12.0	4/7.2	11.0	4/7.2	7.0	6/7.2	7.0	6/7.2
9.5(9R5M)	12.0	2/7.6	12.0	3/7.6	12.0	2/7.6	12.0	3/7.6	12.0	3/7.6	12.0	3/7.6	7.0	6/7.6	7.0	6/7.6
10.0(100M)	12.0	2/8.0	12.0	3/8.0	12.0	2/8.0	12.0	3/8.0	12.0	3/8.0	12.0	3/8.0	7.0	6/8.0	7.0	6/8.0

(TCTC) General Material Characteristics

Materials	Initial Permeability	Permeability with DC bias Hdc=50 oersteds @ 10KHz	Color Code
-2	10	10.0 (100%)	Red/Clear
-8	35	31.9 (91%)	Yellow/Red
-14	14	14.0 (100%)	Black/Red
-18	55	40.7 (74%)	Green/Red
-19	55	40.7 (74%)	Red/Green
-26	75	38.3 (51%)	Yellow/White
-30	22	20.0 (91%)	Green/Gray
-34	33	27.7 (84%)	Gray/Blue
-35	33	27.7 (84%)	Yellow/Gray
-40	60	37.2 (62%)	Green/Yellow
-45	100	46.0 (46%)	Black/Black
-52	75	44.3 (59%)	Green/Blue

Order Codes

Order Codes (TCTC)

TCTC	5026	HA	-	45	1R0	-	K

Part Number	Size Code		Pattern TYPE	Materials	Inductance		Tolerance	
TCTC	5026	15.5×8.0	HA	45	1R0	1.0μH	J	5%
	5026B	15.5×9.5	HB		100	10.0μH	K	10%
	5052	15.5×8.0	HC				L	15%
	5052B	15.5×9.5	V				M	20%
	5018	15.5×8.0					N	30%
	5018B	15.5×9.5					Y	Min.
	6018	20.0×10.0						
	6052	20.0×10.0						

(TC1213)
Low DCR Large Current Inductor

Product Introduction

Token develops high-efficiency coiled power inductors with large current and low DCR.

Features :
- Large Current and Low DCR.

Applications :
- Mother Board of PC.
- Mother Board of Notebook.

Token Develops High-Efficiency Coiled Power Inductors with Large Current and Low DCR. Token has announced a wire-wound power inductor designed for use in the Mother Board of PC and Notebook and various other power devices. The TC1213, measures only 14.0 × 14.5 mm, with a maximum height of 9.5 mm.

Most conventional DC-DC converters use inductors with cores made of relatively expensive metallic materials. By contrast, this product, with a ferrite material, realizes the same DC bias characteristics and other performance features as same-size inductors made with more expensive materials. The TC1213 offers customers much greater design freedom with large current and low DCR by meeting the need to replace power inductors.

Full line products meet RoHS compliant. Token will also produce devices outside these specifications to meet specific customer requirements, contact us with your specific needs. For more information, please link to Token official website "Through Hole Inductors".

Configurations & Dimensions

Configurations & Dimensions (Unit: mm) (TC1213)

Type	A(Max.)	B(Max.)	C ± 1.0	D(Max.)	E(Ref.)	F(Ref.)	G	H	I
TC1213	14.0	14.5	5.0	9.5	7.0	5.0	7.5	5.5	1.8
TC1213A	14.0	14.5	5.0	9.5	7.0	5.0	7.5	5.5	1.8
TC1213B	14.5	14.5	5.0	9.5	7.0	5.0	7.5	5.5	1.8

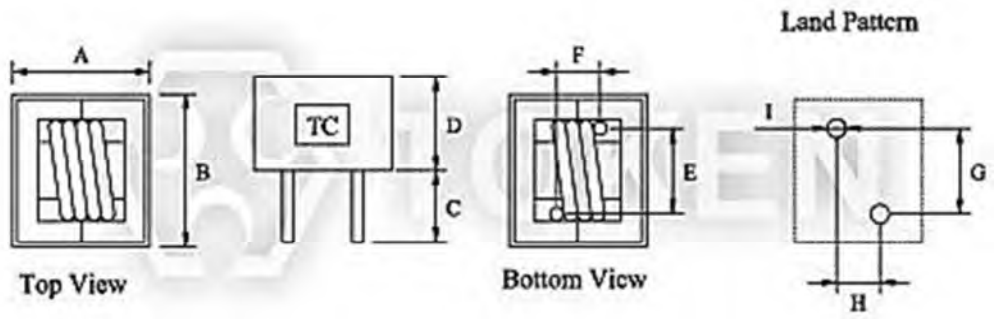

High Current Wire wounds (TC1213) Dimensions

- **Note: Design as Customer's Requested Specifications.**

Electrical Characteristics

Electrical Characteristics (TC1213)

Part Number	Inductance(μH)	Test Freq.(KHz)	DCR (Ω)(Max.)	Peak Current (A) (Max.)	Irms (A)(Max.)
TC1213 - R68N	0.68	100	0.0015	40.00	20.00
TC1213A - R33N	0.33	100	0.0015	40.00	20.00
TC1213B - 1R0N	1.00	100	0.0015	35.00	20.00

Note:
- **Test Freq.: 100KHz / 0.1V.**
- **Operating Temp.: -40℃ ~ +85℃**
- **Inductance drop = 10% typ. at Peak Current.**
- **ΔT=40℃ rise at Irms.**

Order Codes

Order Codes (TC1213)

TC1213B	-	1R0	N

Part Number
TC1213
TC1213A
TC1213B

Inductance	
R68	0.68μH
1R0	1.00μH

Tolerance	
N	30%

Molded Choke Inductor (TCPC)

Product Introduction

Introduction (TCPC)

Features :

- High rated current for high current circuits.
- Have lots of dimensions to choose.

Applications :

- Switching Regulators, Power amplifiers.
- Power Suppliers, Typewriter, Car Electronics.

Token Chokes and Inductors are available lot of dimensions to choose. Token TCPC series structures with epoxy resin encapsulated mould sealed and are available with vertical and horizontal type. The TCPC features with small size, high Q value, low cost, high self-resonance frequency, high availability of a large induced current, small magnetic flux leakage.

The TCPC is suitable for display monitors, camera, microwave ovens, lighting equipment, mobile phones, broadband modems, game consoles, color TV, VCR, notebook computers, inkjet printers, photocopying machines, automotive electronics products.

Token will also produce devices outside these specifications to meet specific customer requirements, please contact our sales or link to Token official website "Through Hole Inductors" for more information.

Configurations & Dimensions

Configurations & Dimensions (TCPC)

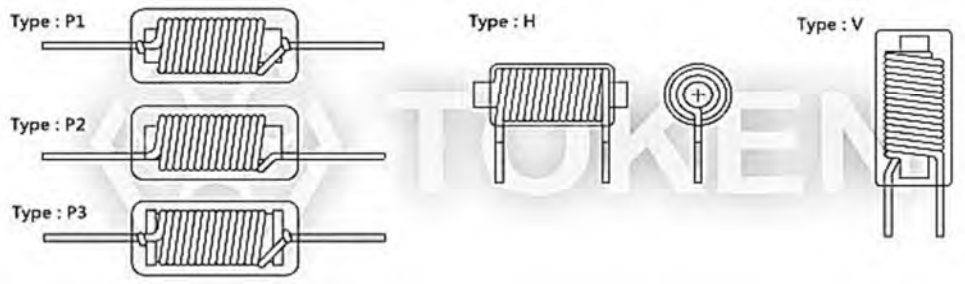

Vertical and Horizontal Choke (TCPC) Dimensions

Order Codes

Order Codes (TCPC)

TCPC	0513	H	-	100		K	
Part Number	Core Dimension	Type		Inductance		Tolerance	
TCPC	Diameter & Length	P1		1R0	1.0μH	J	5%
		P2		100	10.0μH	K	10%
		P3				L	15%
		H				M	20%
		V				N	30%
						Y	Min.

General Information

Leading-Edge Technology

Token Electronics brand passive component specializes in standard and custom solutions offering the latest in state-of-the-art low profile high power density inductor components. Token provides cost-effective, comprehensive solutions that meet the evolving needs of technology-driven markets. In working closely with the industry leaders in chipset and core development, we remain at the forefront of innovation and new technology to deliver the optimal mix of packaging, high efficiency and unbeatable reliability. Our designs utilize high frequency, low core loss materials, new and custom core shapes in combination with innovative construction and packaging to provide designers with the highest performance parts available on the market.

Find Inductor Solutions Faster

Find Your Inductor – rfq@token.com.tw
Only timely and accurate information can help manage the changing needs of your customers. The Token Inductor Finder puts you only a click away from all of the inductor information you need.

Find Your Solution - rfq@token.com.tw
Selecting the correct inductor solution will not only save you time, but it will give you a competitive edge. At Token, we are committed to helping you find the most efficient alternative for your power design. Our inductor and power supply design experts can help you make that selection.

Please forward us:

- A brief description of your particular application's requirements.
- Details of an existing solution that you'd like to replace, enhance or find an alternative.
- Inquiries for feasibility to tailor a power transformer or inductor to your specific application.

We can also help you with any additional technical information you might need relating to any of our products.
Ask Us Today